THE SURPLUS HANDBOOK

Receivers and Transmitters

by

Charles Caringella, W6NJV

and

Richard Clark, W6NJE

CONTENTS

APN-1 Radio Altimeter
APS-13 Radio Receiver & Transmitter
ARB Radio Receiver
ARC-4 Radio Receiver & Transmitter
ARC-5 Radio Receiver (Low Frequency)
ARC-5 Radio Receiver (VHF)
ARN-5 Radio Receiver
ARR-2 Radio Receiver
ASB-7 Radio Receiver
BC-222 Radio Receiver & Transmitter
BC-312 Radio Receiver
BC-314 Radio Receiver
BC-342 Radio Receiver
BC-344 Radio Receiver
BC-348 Radio Receiver
BC-603 Radio Receiver
BC-611 Radio Receiver & Transmitter
BC-624 Radio Receiver
BC-652 Radio Receiver
BC-654 Radio Receiver & Transmitter
BC-659 Radio Receiver & Transmitter
BC-669 Radio Receiver & Transmitter
BC-683 Radio Receiver
BC-728 Radio Receiver
BC-745 Radio Receiver & Transmitter
BC-764 Radio Receiver
BC-779 Radio Receiver
BC-794 Radio Receiver
BC-923 Radio Receiver
BC-1000 Radio Receiver & Transmitter
BC-1004 Radio Receiver
BC-1066 Radio Receiver
BC-1206 Radio Receiver
BC-1306 Radio Receiver & Transmitter
BC-1335 Radio Receiver & Transmitter
BC-AR-231 Radio Receiver
CRC-7 Radio Receiver & Transmitter
DAK-3 Radio Receiver
GF-11 Radio Receiver
MARK II Radio Receiver & Transmitter
MN-26 Radio Receiver
RAK-5 Radio Receiver
RAL-5 Radio Receiver
RAX-1 Radio Receiver
TBY Radio Receiver & Transmitter
TCS Radio Receiver
Resistor Color Code
Capacitor Color Code
JAN and VT Tube Cross Index

$3.50
Cat. No. EE-510

THE SURPLUS HANDBOOK

Receivers and Transceivers

by

Charles Caringella, W6NJV & Richard Clark, W6NJE

and the Editors of "Western Radio Amateur"

Published and distributed to the electronics trade by

EDITORS and ENGINEERS, Ltd. New Augusta, Indiana

Copyright 1959

THIS BOOK, OR PARTS THEREOF, MAY NOT BE REPRODUCED
IN ANY FORM WITHOUT WRITTEN PERMISSION OF THE PUBLISHER.

CONTENTS

APN-1 1

APS-13 3

ARB 5

ARC-4 7

ARC-5 (L.F.) 9

ARC-5 (V.H.F.) 11

ARN-5 13

ARR-2 15

ASB-7 17

BC-222 19

BC-312 21

BC-314 23

BC-342 21

BC-344 23

BC-348 25

BC-603 29

BC-611 31

BC-624 (SCR-522) 33

BC-652 35

BC-654 37

BC-659 39

BC-669 41

BC-683 43

BC-728 45

BC-745 47

BC-764 49
BC-779 49
BC-794 49
BC-923 51
BC-1000 53
BC-1004 49
BC-1066 55
BC-1206 57
BC-1306 59
BC-1335 63
BC-AR-231 65
CRC-7 69
DAK-3 71
GF-11 65
MARK II 75
MN-26 77
RAK-5 79
RAL-5 79
RAX 83
Super Pro 49
TBY 85
TCS 87
Resistor Color Code 89
Capacitor Color Code 90
JAN and VT Tube Cross Index 91

NOMENCLATURE

Equipment Indicator Letters

Installation	Type of Equipment	Purpose
A—Airborne (installed and operated in aircraft).	A—Invisible light, heat radiation.	A—Auxiliary assemblies (not complete operating sets).
B—Underwater mobile, submarine.	B—Pigeon.	B—Bombing.
C—Air transportable (inactivated, do not use).	C—Carrier (wire).	C—Communications (receiving and transmitting).
D—Pilotless carrier.	F—Photographic.	D—Direction finder.
F—Ground, fixed.	G—Telegraph or teletype (wire).	G—Gun directing.
G—Ground, general ground use (includes two or more ground installations).	I—Interphone and public address.	H—Recording (photographic, meteorological and sound).
K—Amphibious.	K—Telemetering.	J—Countermeasures (receiving and transmitting).
M—Ground, mobile (installed as operating unit in a vehicle which has no function other than transporting the equipment).	M—Meteorological.	L—Searchlight control.
P—Ground, pack or portable (horse or man).	N—Sound in air.	M—Maintenance and test assemblies (including tools).
S—Water surface craft.	P—Radar.	N—Navigational aids (including altimeters, beacons, compasses, instrument landing and depth sounding).
T—Ground, transportable.	Q—Underwater sound.	P—Reproducing (photographic and sound).
V—Ground, vehicular (installed in vehicle designed for functions other than carrying electronic equipment—such as tanks).	R—Radio.	Q—Special, or combination of types.
U—General utility (includes two or more general installation classes, airborne, shipboard and ground).	S—Special types, magnetic, etc., or combinations of types.	R—Receiving or listening.
W—Underwater, fixed.	T—Telephone (wire).	S—Detecting and/or range and bearing.
	V—Visual and visible light.	T—Transmitting.
	X—Facsimile or television.	W—Remote control.
		X—Identification and recognition.

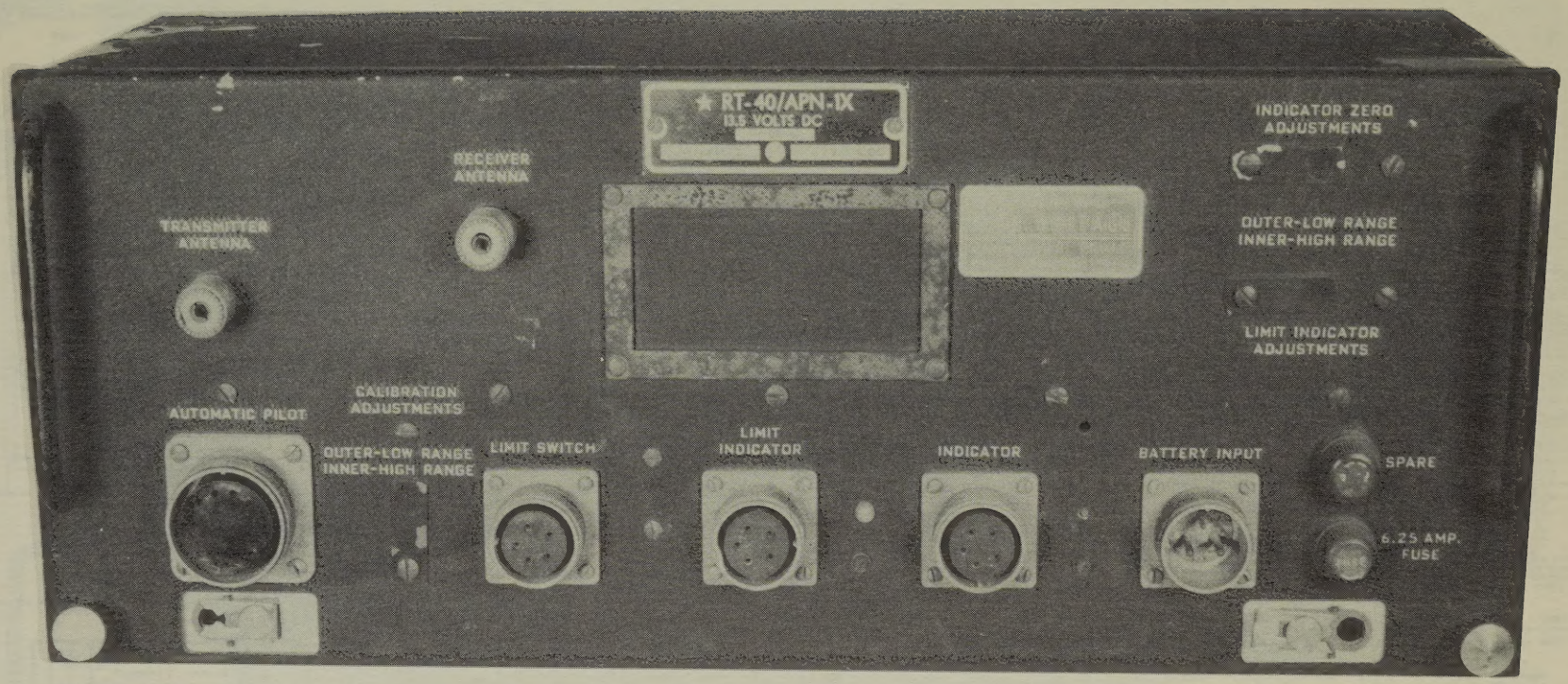

RADIO ALTIMETER APN-1

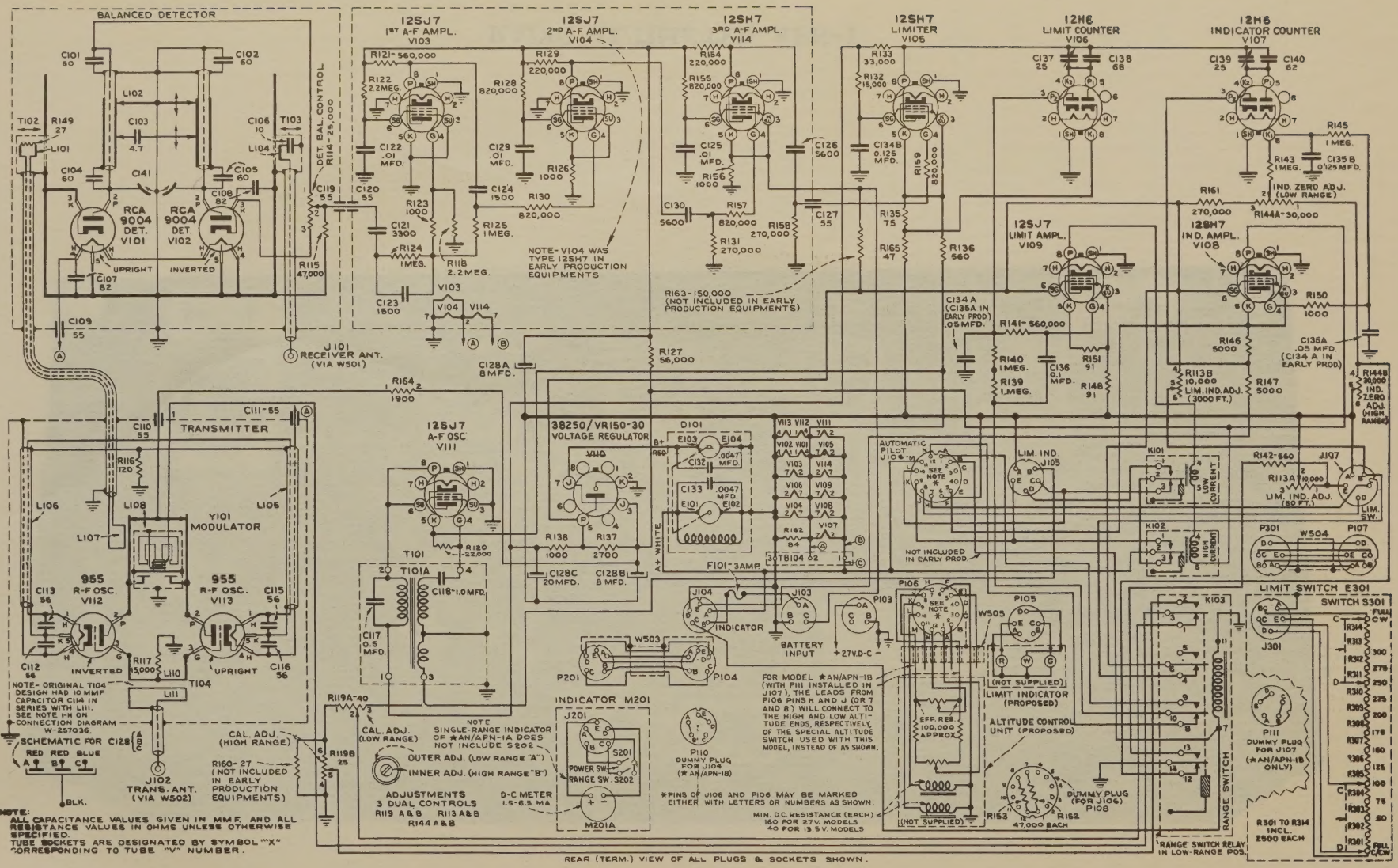

SCHEMATIC DIAGRAM RADIO ALTIMETER APN-1

RADIO RECEIVER AND TRANSMITTER APS-13

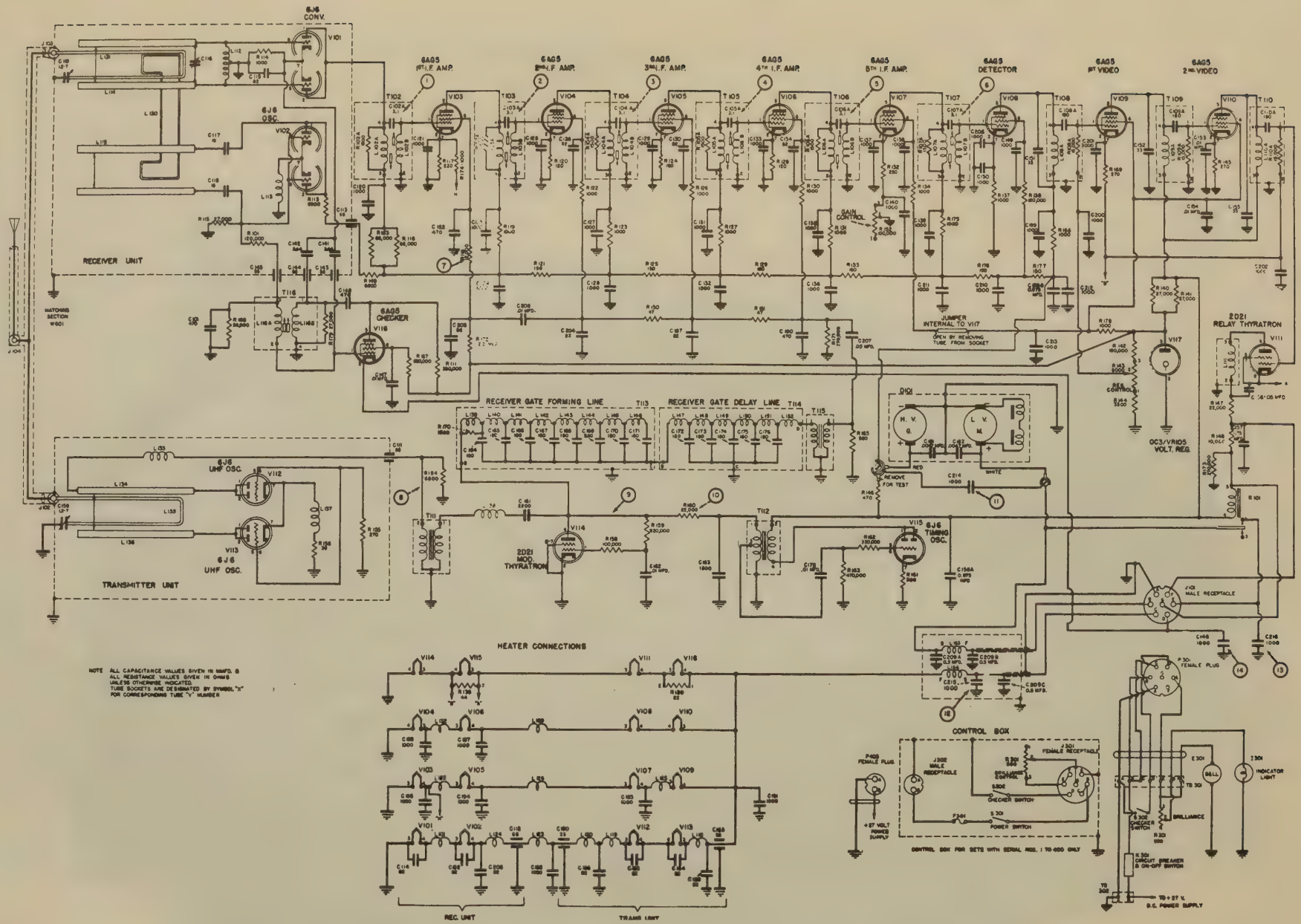

SCHEMATIC DIAGRAM RADIO RECEIVER AND TRANSMITTER APS-13

RADIO RECEIVER ARB

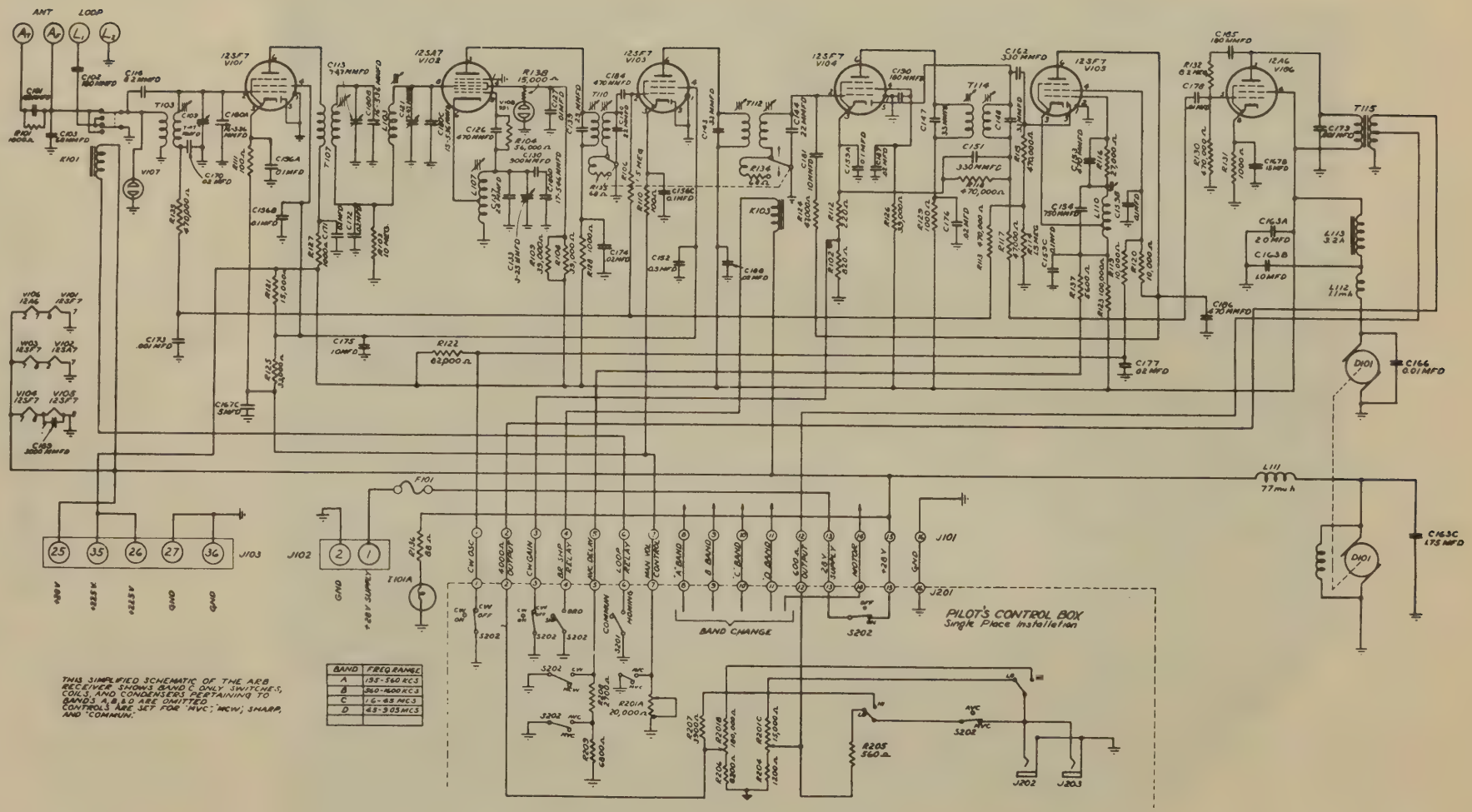

SCHEMATIC DIAGRAM RADIO RECEIVER ARB

RADIO RECEIVER AND TRANSMITTER ARC-4

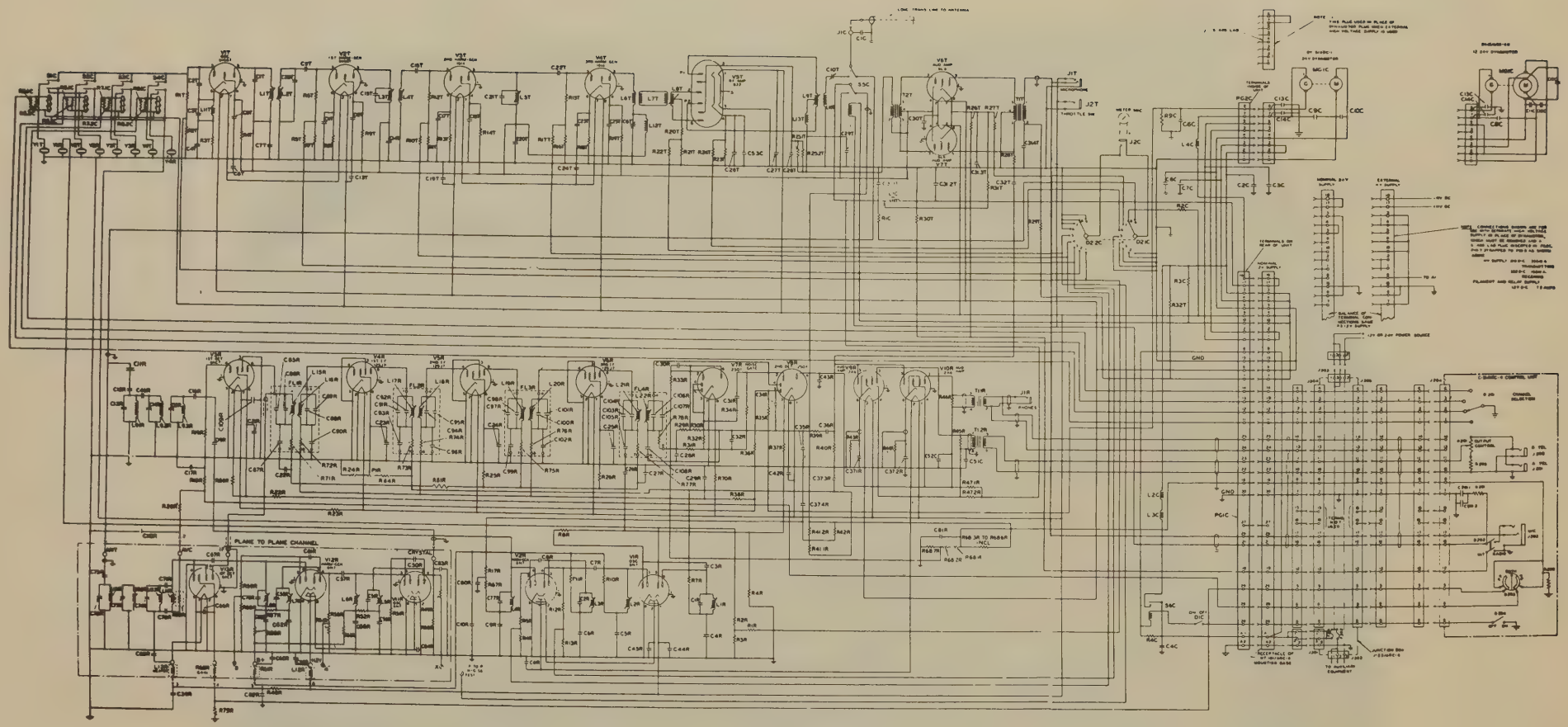

SCHEMATIC DIAGRAM RADIO RECEIVER AND TRANSMITTER ARC-4

RADIO RECEIVER ARC-5 (LOW FREQUENCY)

NOTES:

1. CAPACITANCE VALUES ARE IN MICROFARADS UNLESS INDICATED AS MICROMICROFARADS BY MMF.
   RESISTANCE VALUES ARE IN OHMS UNLESS INDICATED AS MEGOHMS BY MEG.
2. C-46 NOT IN EARLY PRODUCTION UNITS. A 1000 OHM RESISTOR R-28 WAS CONNECTED BETWEEN R-21 AND C-30 IN EARLY PRODUCTION UNITS. C-20B WAS .01 MFD. IN EARLY PRODUCTION UNITS.

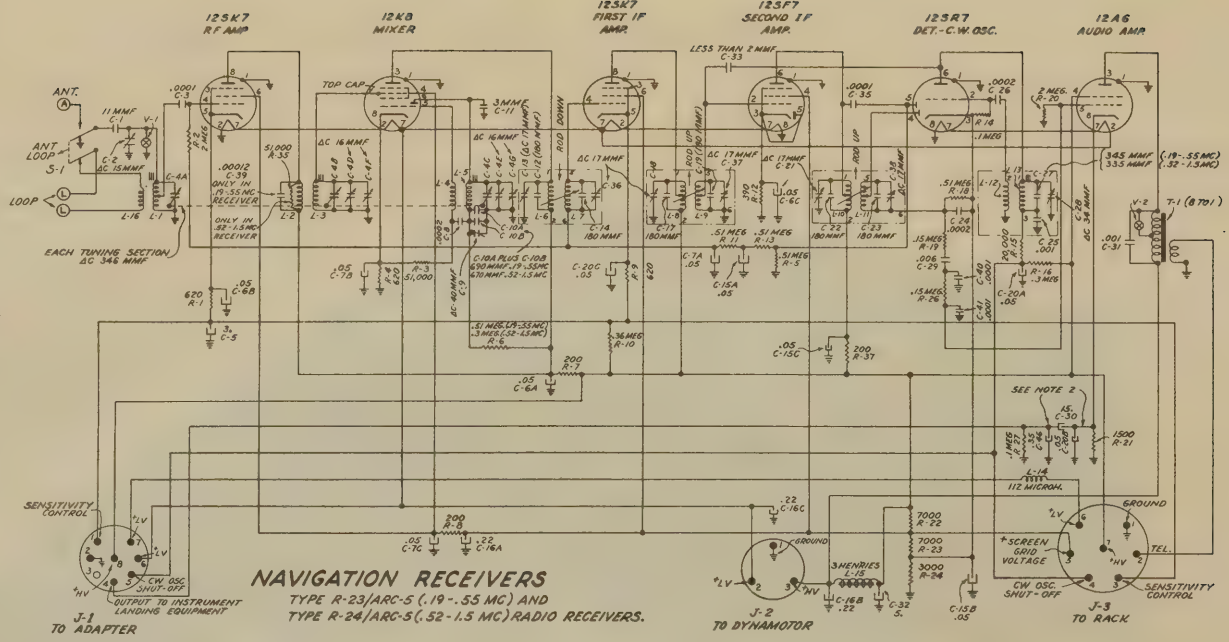

NAVIGATION RECEIVERS

TYPE R-23/ARC-5 (.19-.55 MC) AND TYPE R-24/ARC-5 (.52-1.5 MC) RADIO RECEIVERS.

NOTES:

1. * VALUES FOR THE 1.5-3 MC, 3-6 MC AND 6-9.1 MC RECEIVERS IN ORDER SHOWN.
2. TAP IS AT TOP OF COIL FOR 3-6 MC AND 6-9.1 MC RECEIVERS.
3. TAP IS AT TOP OF COIL FOR 6-9.1 MC RECEIVERS
4. C-45 NOT IN 1.5-3 MC NOR 6-9.1 MC RECEIVERS. TERMINAL 5 IS UNCONNECTED IN 1.5-3 MC RECEIVER AND GROUNDED IN 6-9.1 MC RECEIVER.
5. C-33 REPRESENTS THE EFFECTIVE COUPLING CAPACITANCE TERMINAL 6 TO 4 AS MODIFIED BY CONNECTIONS DESCRIBED IN NOTE 4.
6. CAPACITANCE VALUES ARE IN MICROFARADS UNLESS INDICATED AS MICROMICROFARADS BY MMF.
   RESISTANCE VALUES ARE IN OHMS UNLESS INDICATED AS MEGOHMS BY MEG.

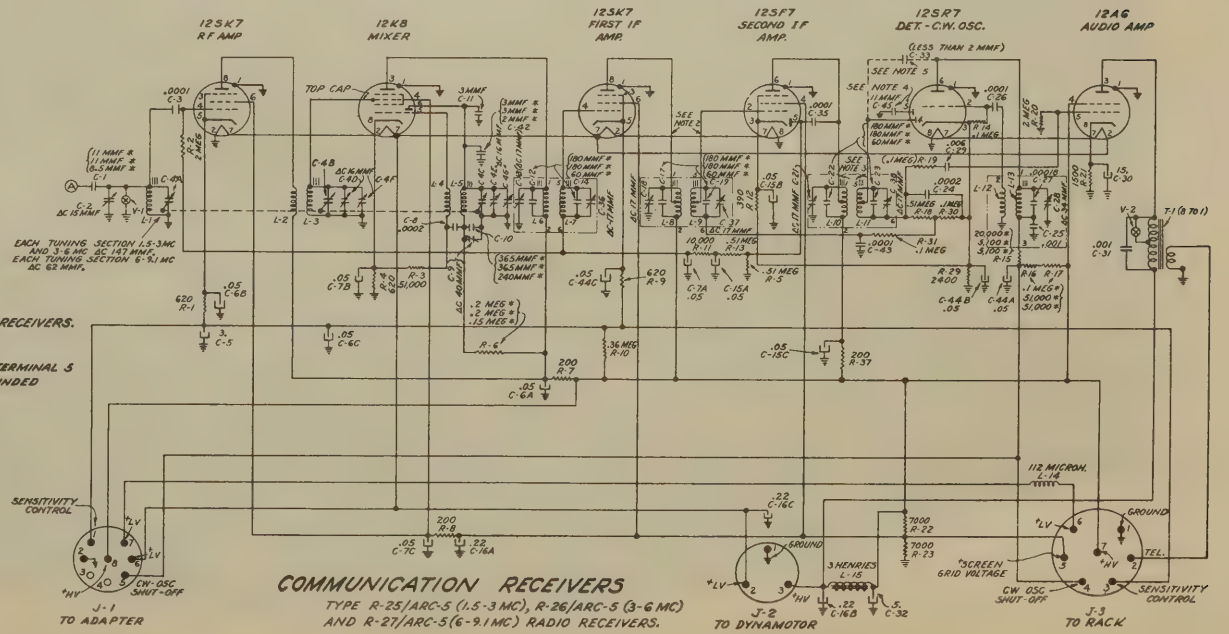

COMMUNICATION RECEIVERS

TYPE R-25/ARC-5 (1.5-3 MC), R-26/ARC-5 (3-6 MC) AND R-27/ARC-5 (6-9.1 MC) RADIO RECEIVERS.

SCHEMATIC DIAGRAM RADIO RECEIVER ARC-5 (LOW FREQUENCY)

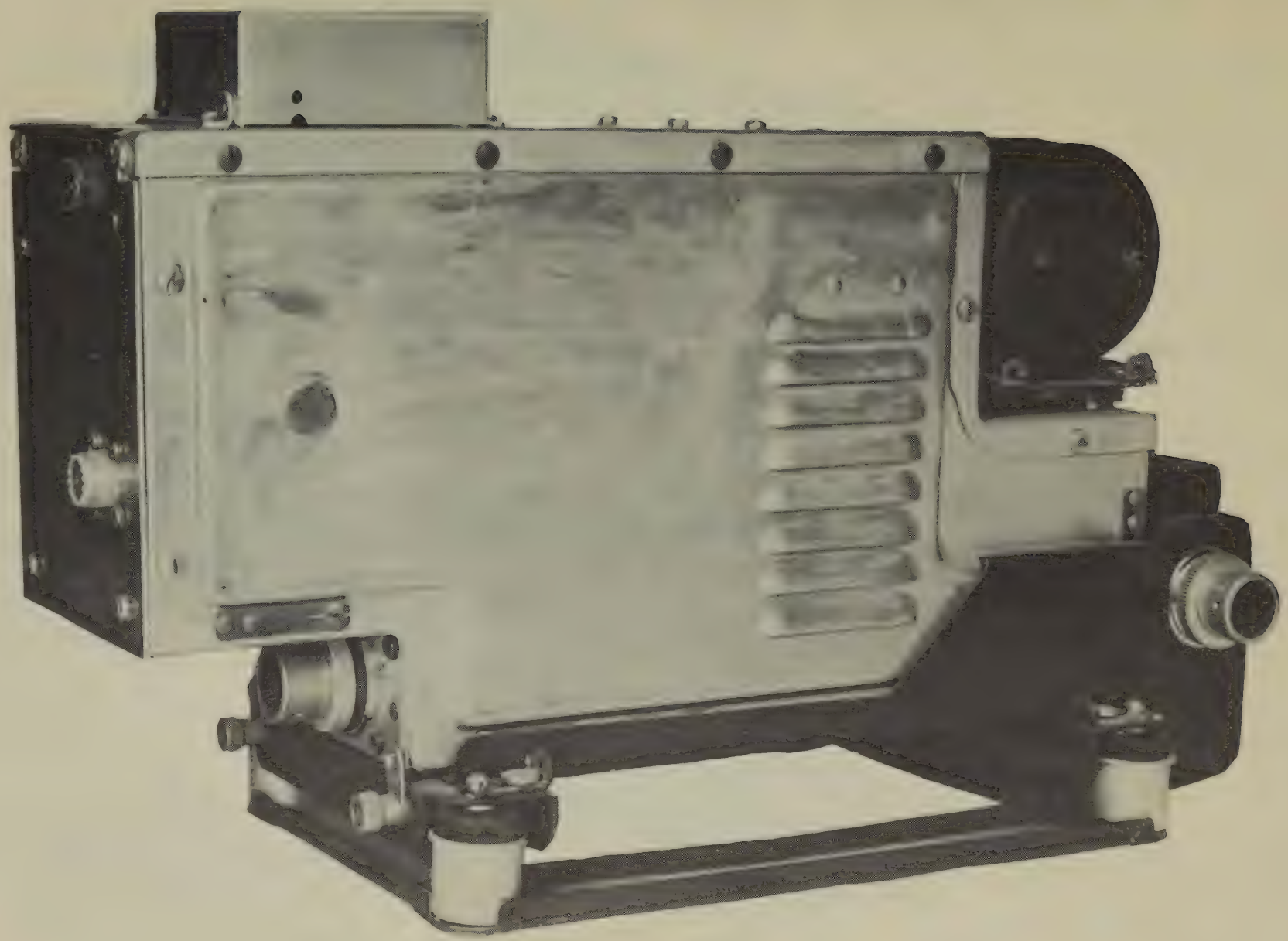

RADIO RECEIVER ARC-5 (VHF)

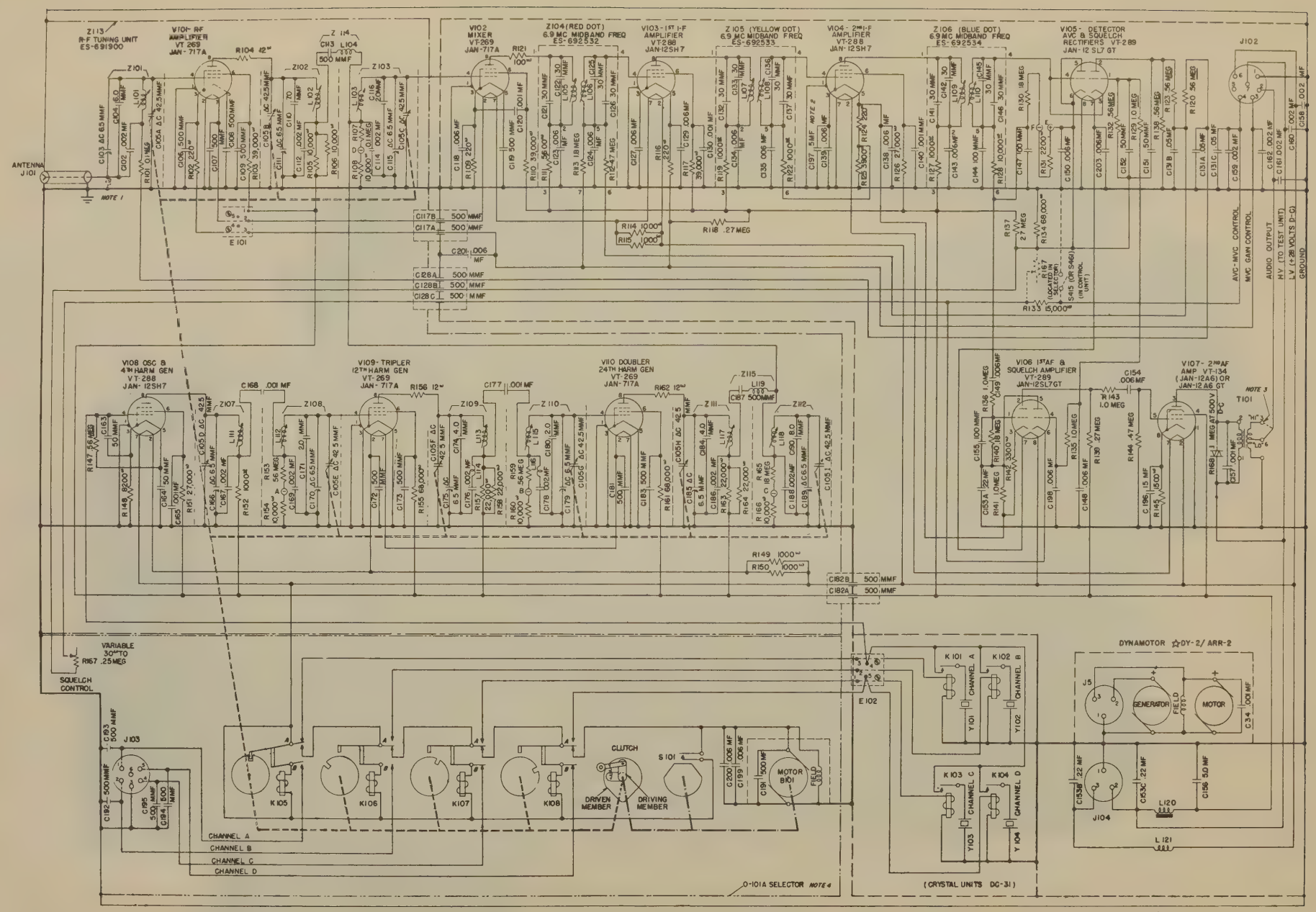

SCHEMATIC DIAGRAM RADIO RECEIVER ARC-5 (VHF)

RADIO RECEIVER ARN-5

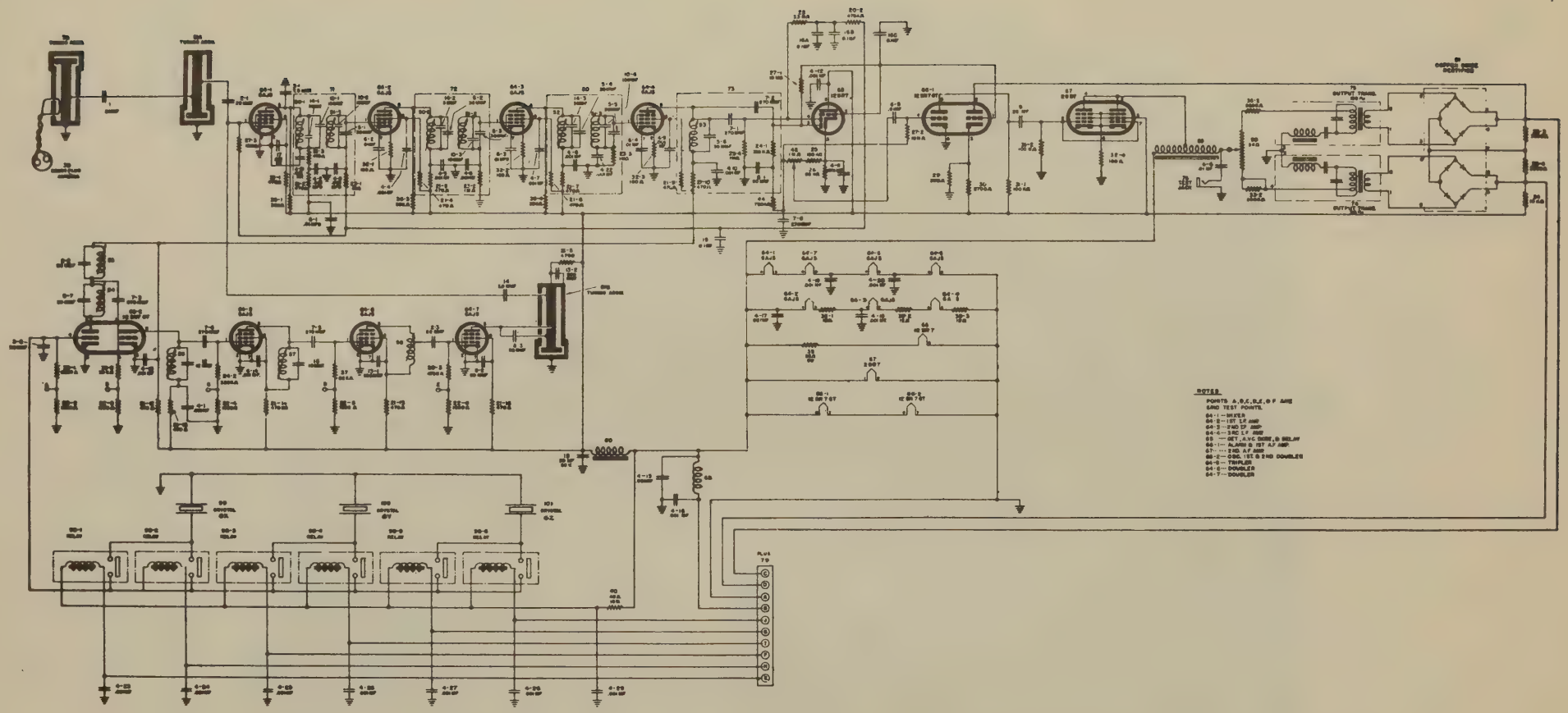

SCHEMATIC DIAGRAM RADIO RECEIVER ARN-5

RADIO RECEIVER ARR-2

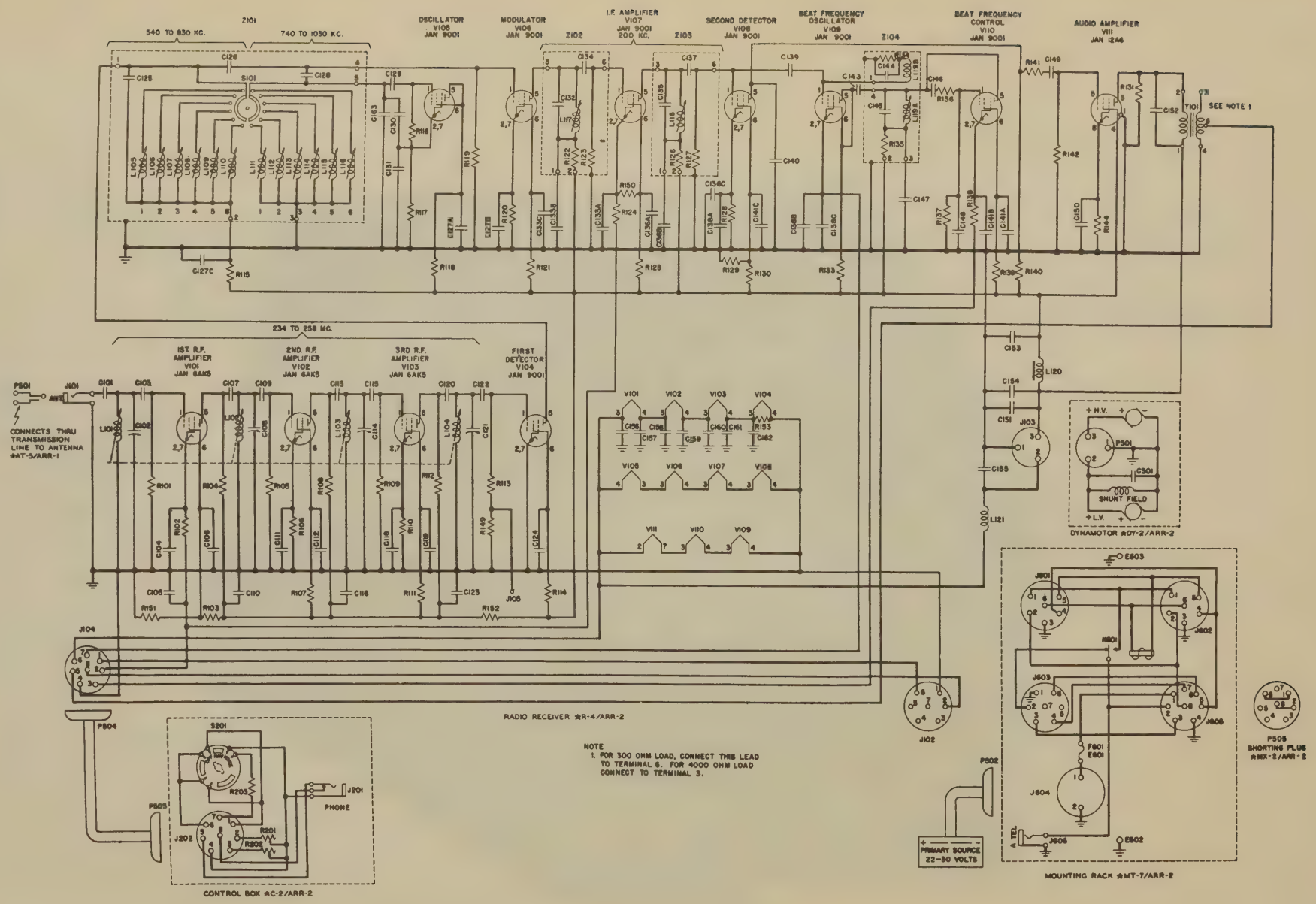

SCHEMATIC DIAGRAM RADIO RECEIVER ARR-2

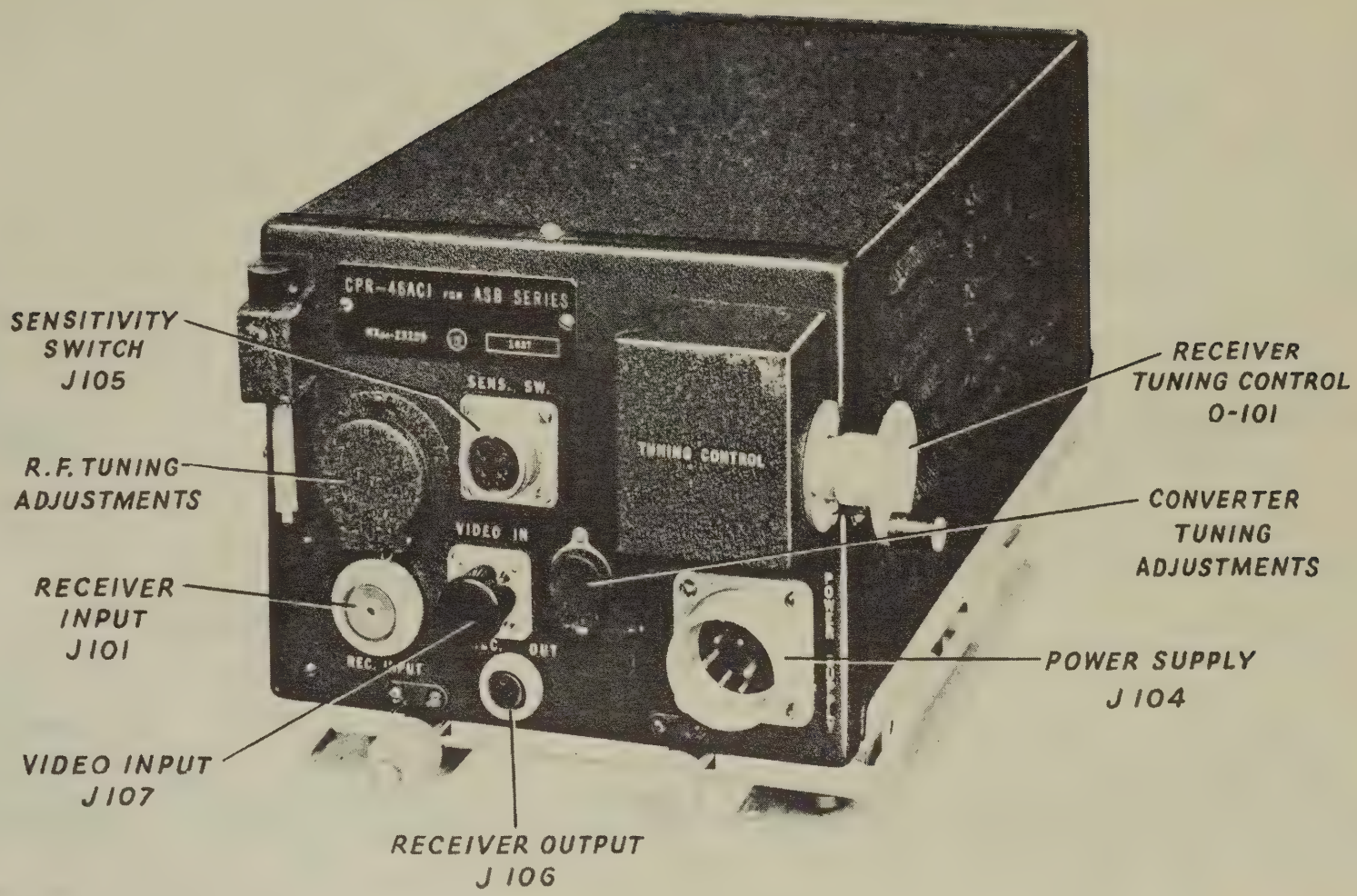

RADIO RECEIVER ASB-7

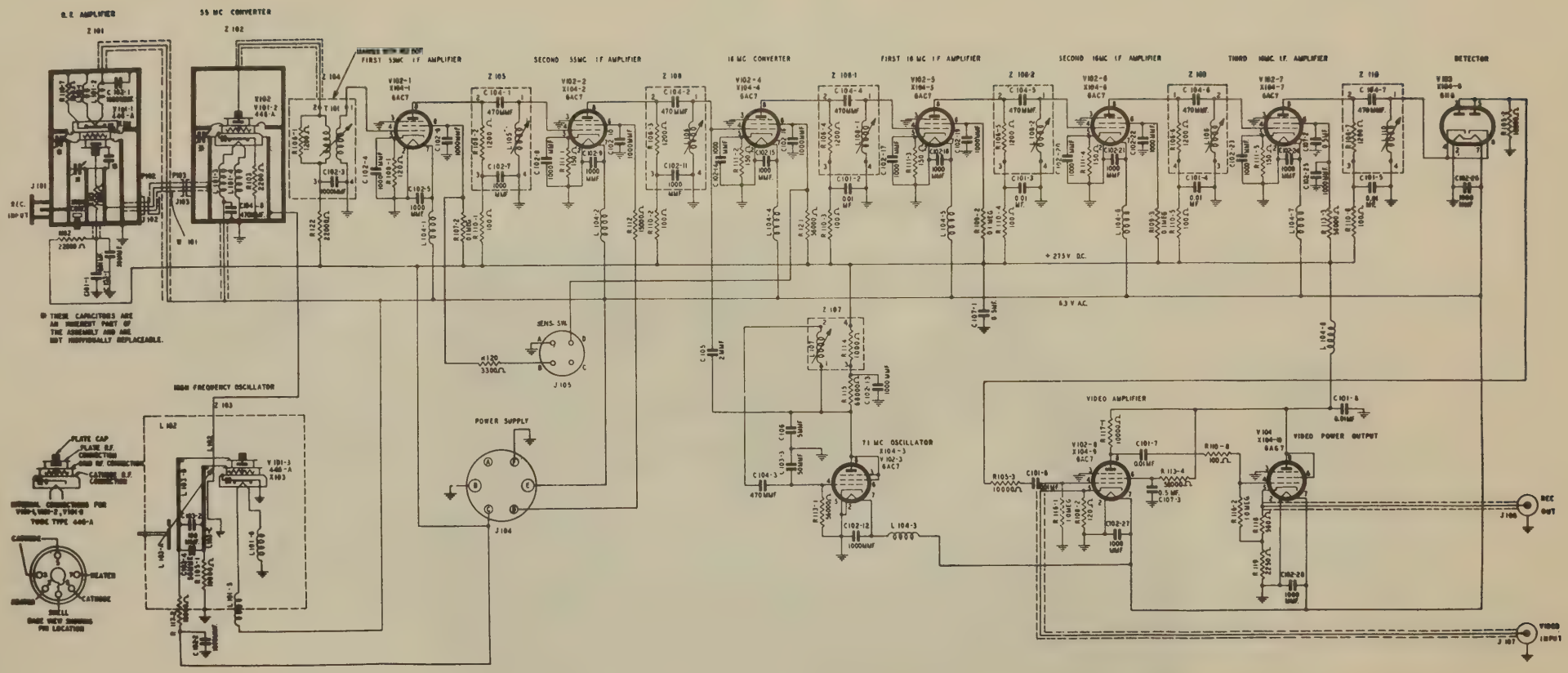

SCHEMATIC DIAGRAM RADIO RECEIVER ASB-7

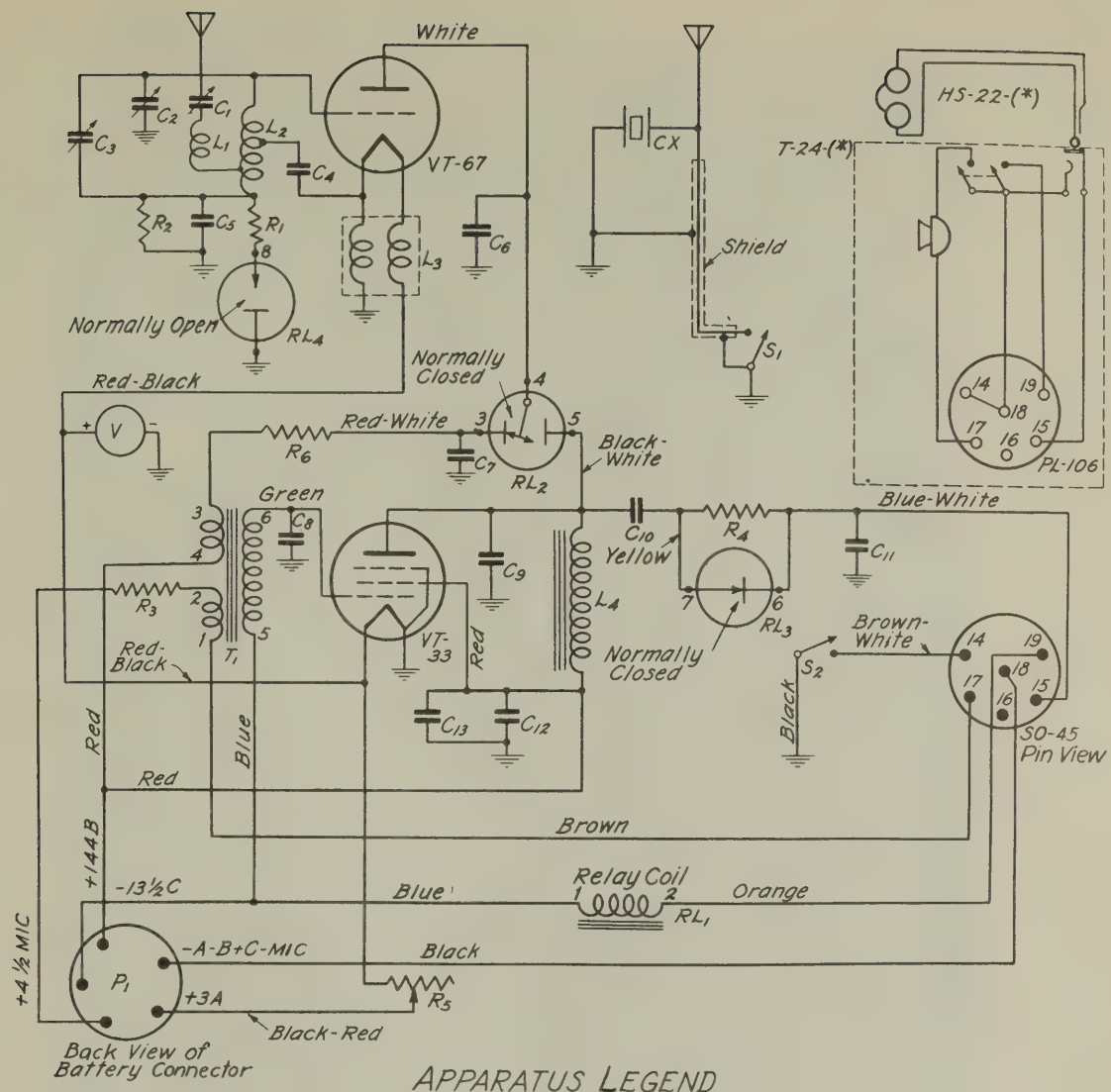

APPARATUS LEGEND

C_1 - Capacitor - 10 $\mu\mu f$
C_2 - Capacitor, Trimmer
C_3 - Capacitors 6-32 $\mu\mu f$
C_4 - Capacitor - 100 $\mu\mu f$
C_5 - Capacitor - 0.001 μf
C_6 - Capacitor - 0.003 μf
C_7 - Capacitor - 0.002 μf
C_8 - Capacitor - 250 $\mu\mu f$
C_9 - Capacitor - 0.001 μf
C_{10} - Capacitor - 0.003 μf
C_{11} - Capacitor - 0.01 μf
C_{12} - Capacitor - 0.5 μf
C_{13} - Capacitor - 0.5 μf
CX - Crystal
L_1, L_2 - Coil, Tuning
L_3 - Coil, Filament Choke
L_4 - Coil
P_1 - Plug, Battery
R_1 - Resistor - 5,000 ohms
R_2 - Resistor - 30,000 ohms
R_3 - Resistor - 40 ohms
R_4 - Resistor - 200,000 ohms
R_5 - Rheostat - 10 ohms
R_6 - Resistor - 20,000 ohms
RL_1 - RL_2 - RL_3 - RL_4 - Relay BK-10
S_1 - Switch
S_2 - Switch
SO - Socket
T_1 - Transformer
V - Voltmeter

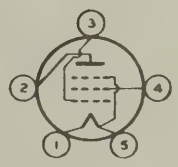

VT-33
RMA TYPE 33

VT-67
RMA TYPE 30

SCHEMATIC DIAGRAM RADIO RECEIVER AND TRANSMITTER BC-222

RADIO RECEIVER BC-312 AND BC-342

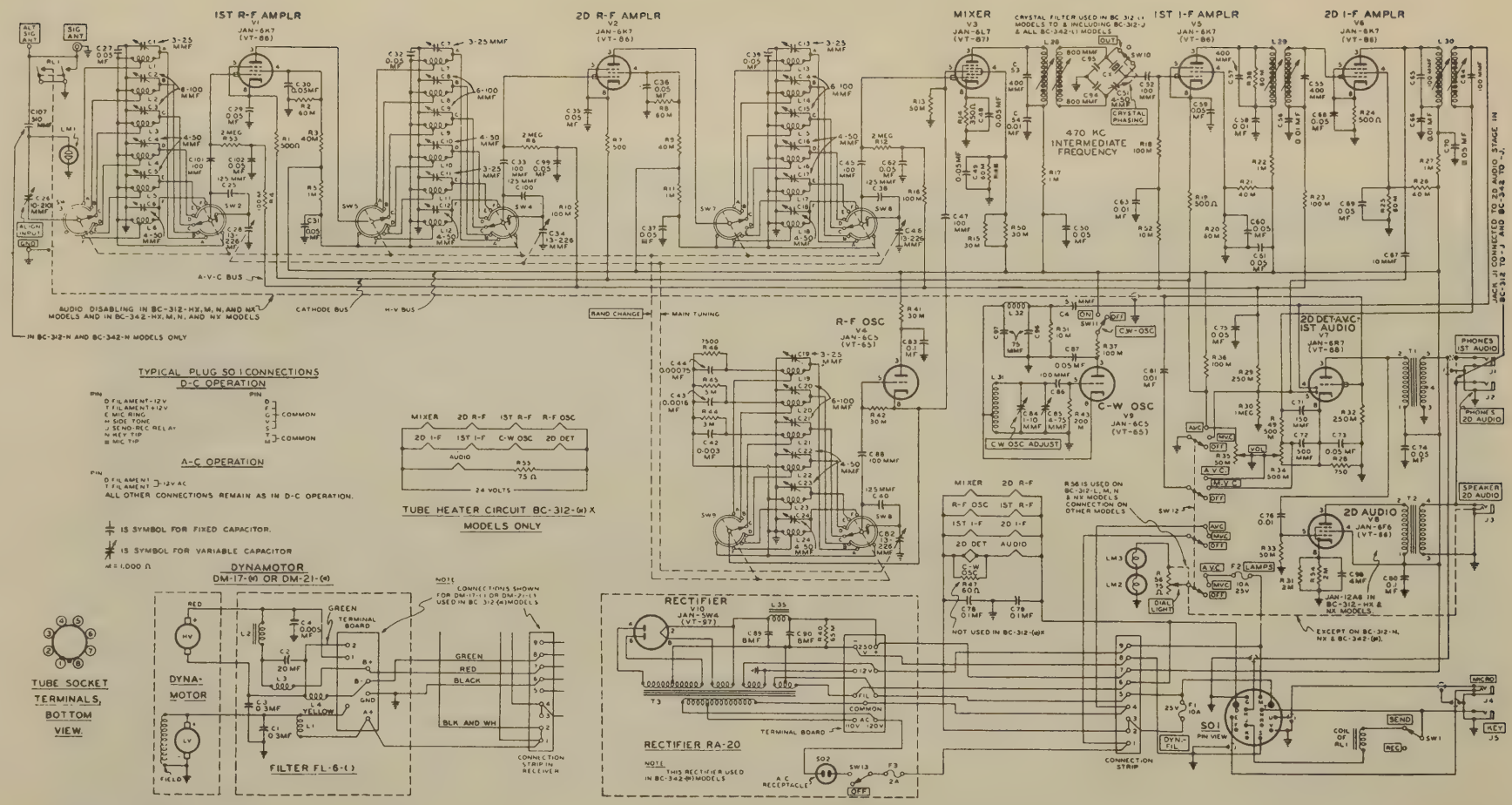

SCHEMATIC DIAGRAM RADIO RECEIVER BC-312 AND BC-342

RADIO RECEIVER BC-314 AND BC-344

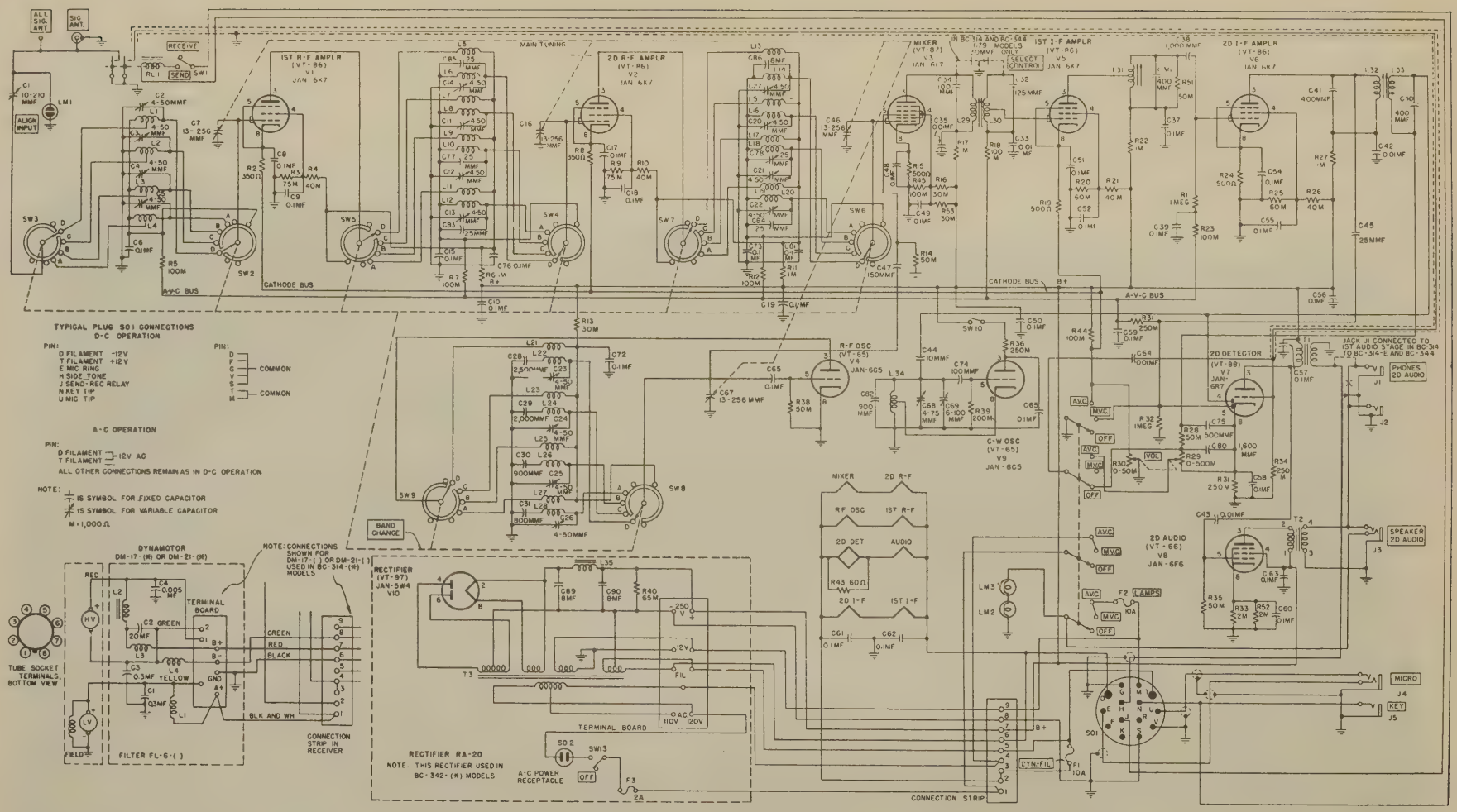

SCHEMATIC DIAGRAM RADIO RECEIVER BC-314 AND BC-344

RADIO RECEIVER BC-348

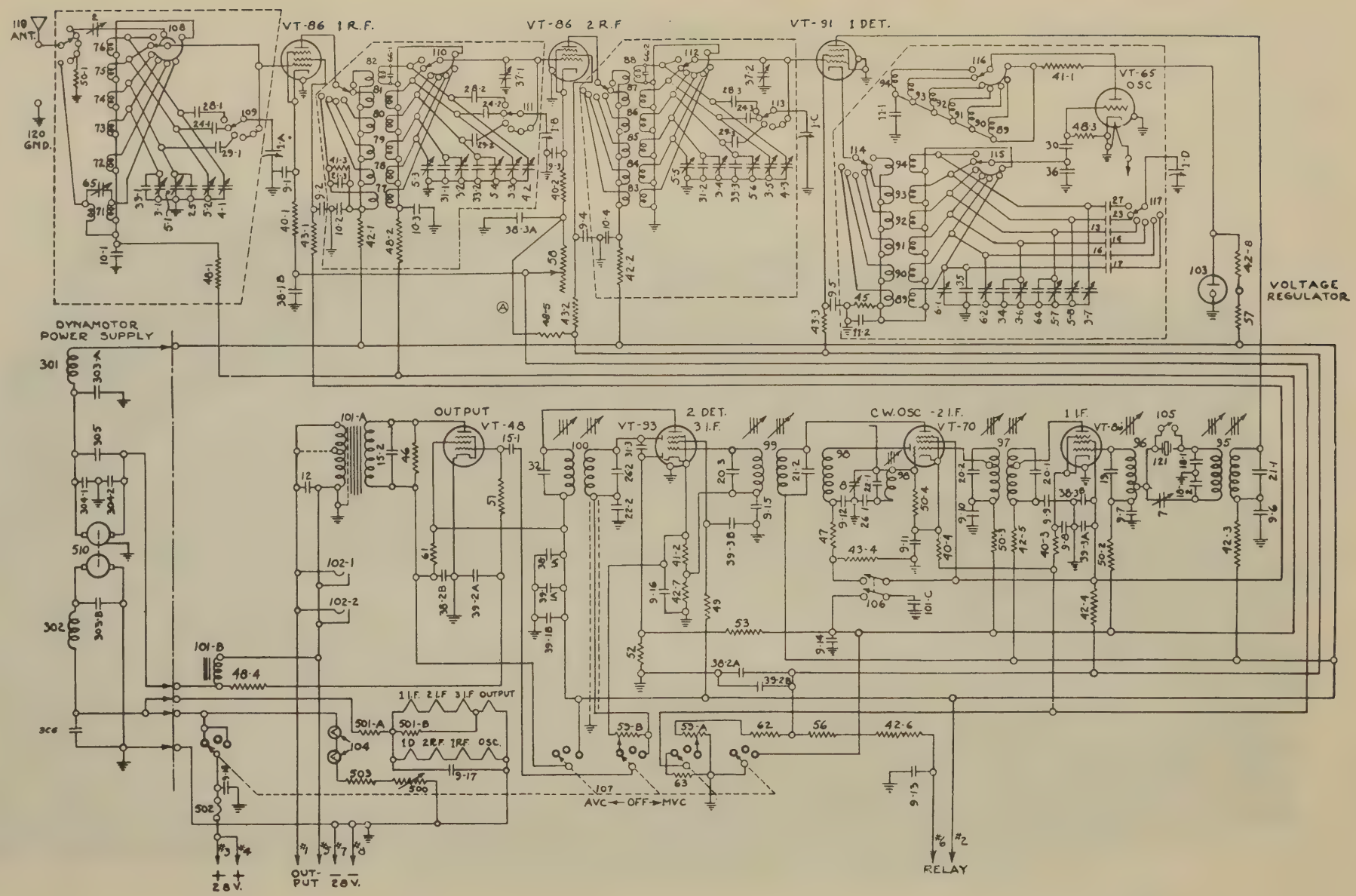

SCHEMATIC DIAGRAM RADIO RECEIVER BC-348 (E,M,P)

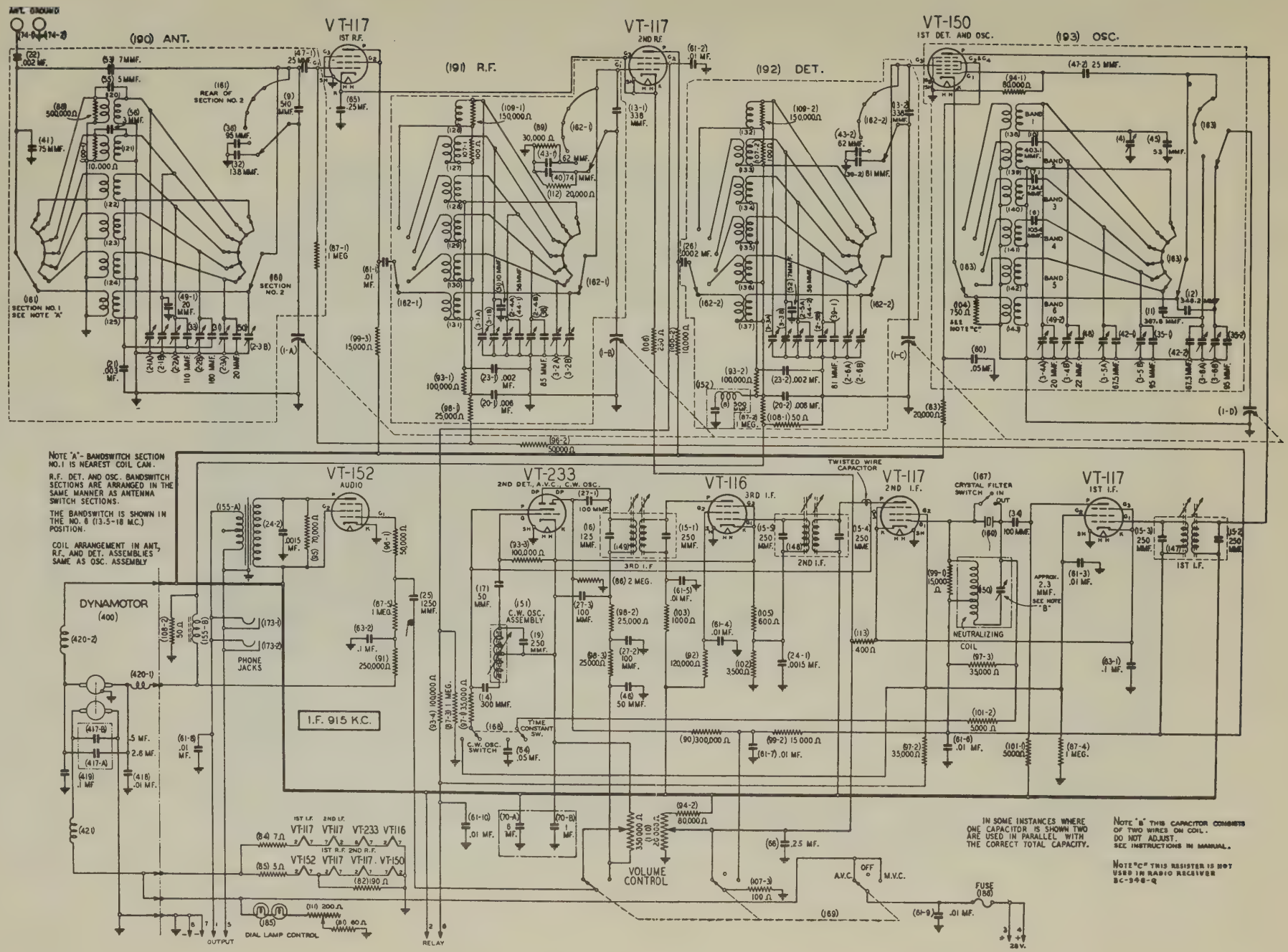

SCHEMATIC DIAGRAM RADIO RECEIVER BC-348 J

RADIO RECEIVER BC-603

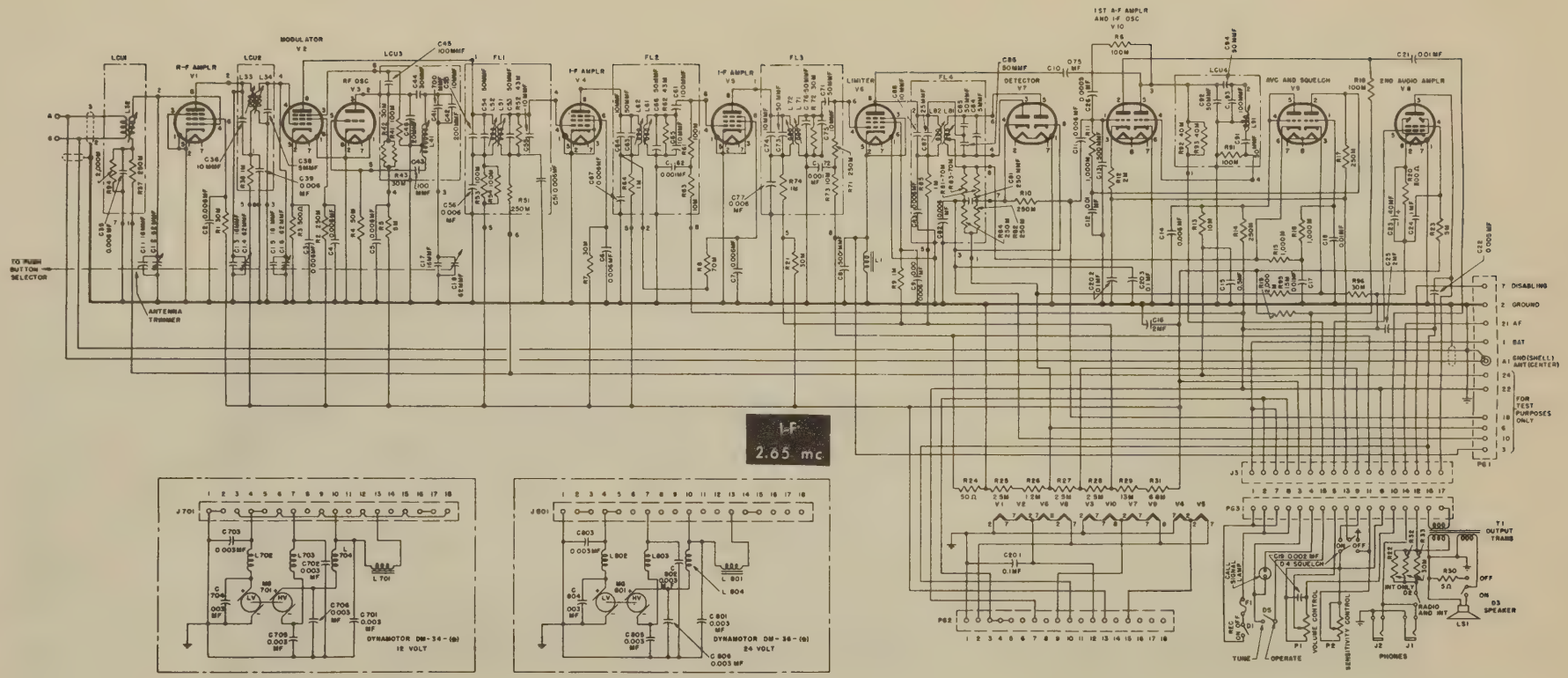

TUBE SOCKET TERMINALS, BOTTOM VIEW

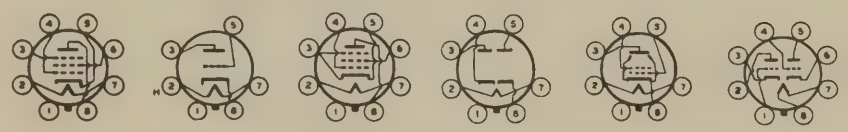

JAN-6AC7 JAN-6J5 JAN-12SG7 JAN-6H6 JAN-6V6GT/G JAN-6SL7GT

BC-603-AM, BC-603-CM, AND BC-603-DM MODIFICATION

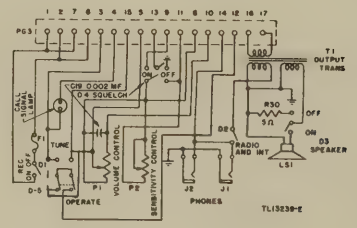

SCHEMATIC DIAGRAM RADIO RECEIVER BC-603

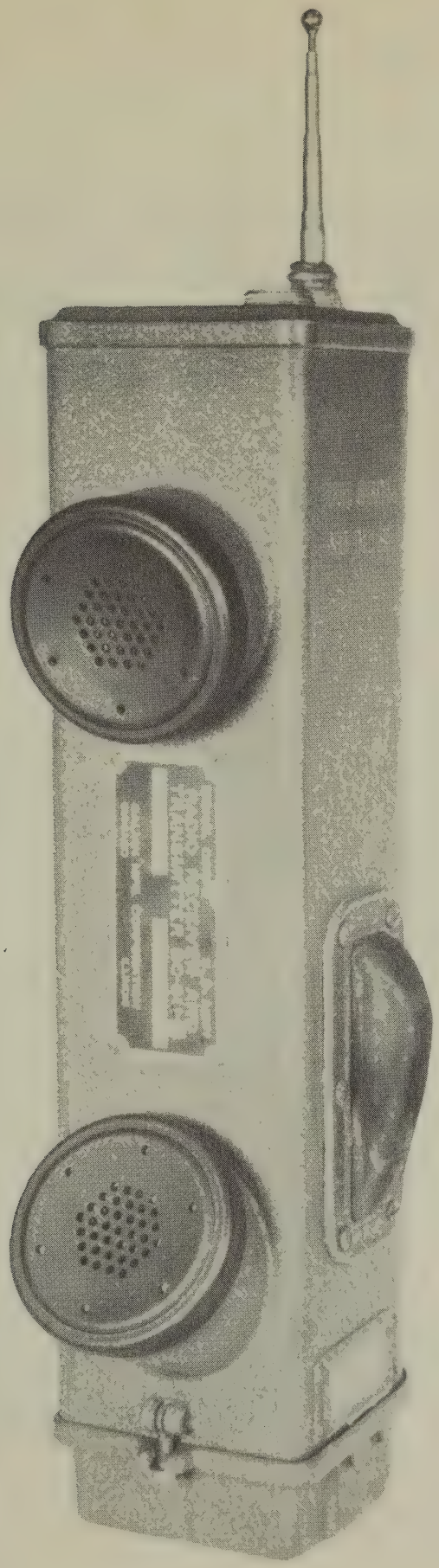

RADIO RECEIVER AND TRANSMITTER BC-611

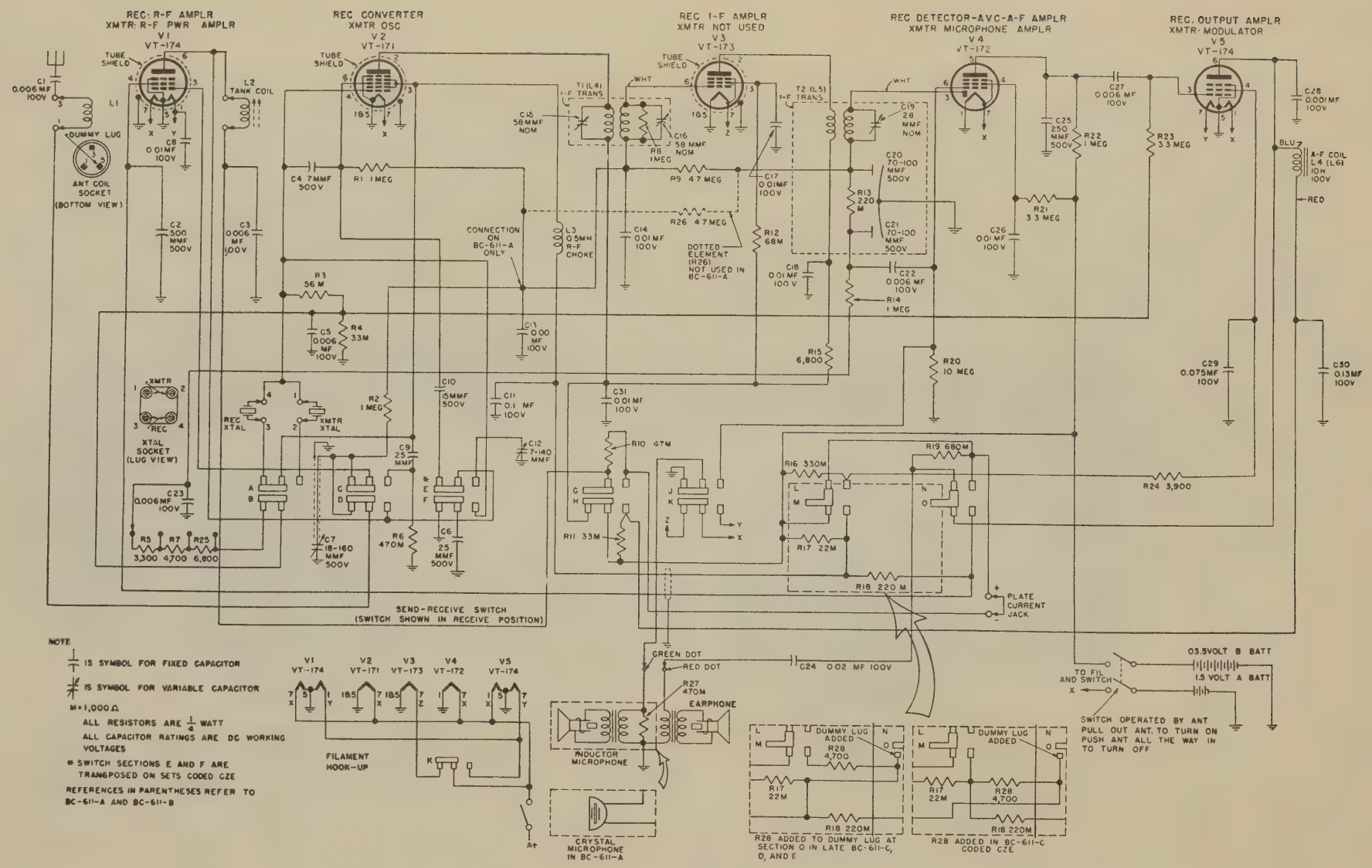

SCHEMATIC DIAGRAM RADIO RECEIVER AND TRANSMITTER BC-611

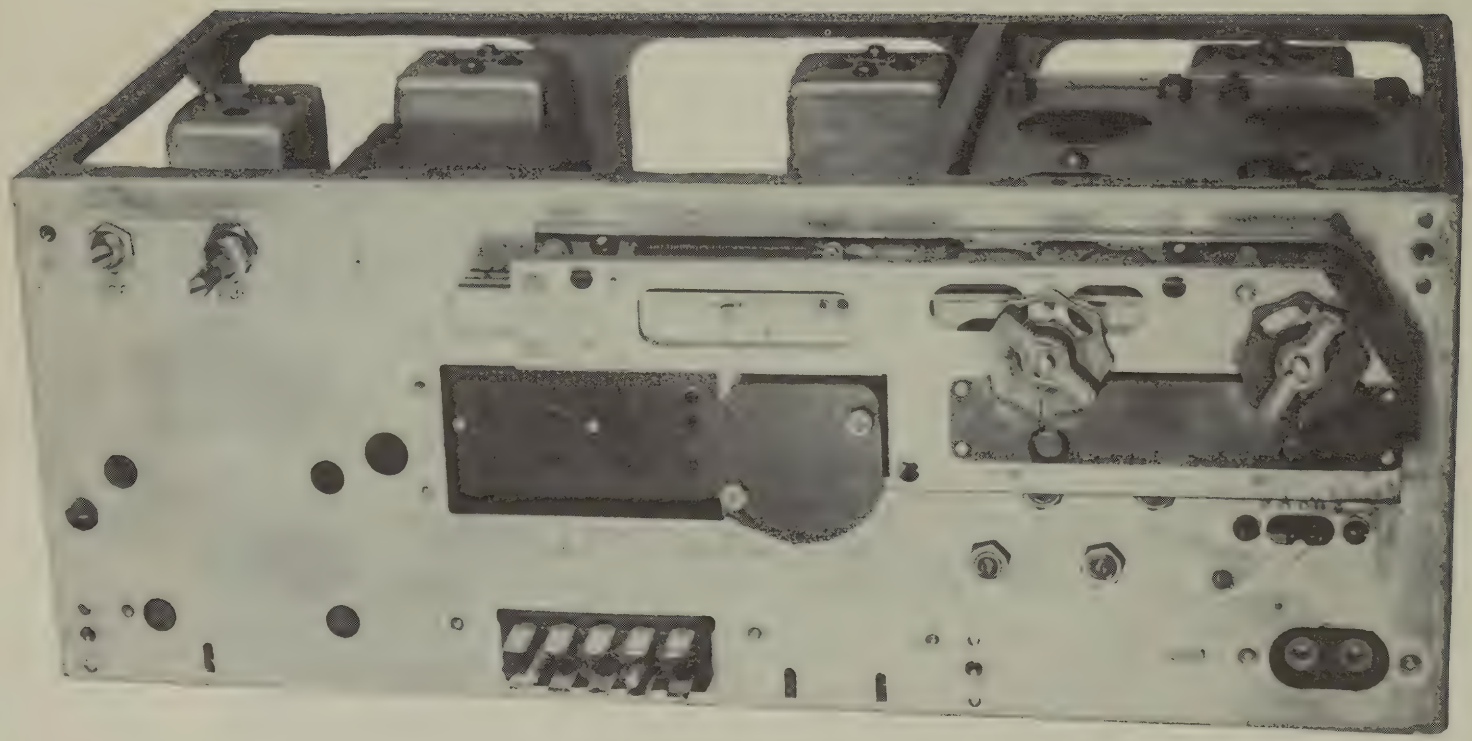

RADIO RECEIVER BC-624 (SCR-522)

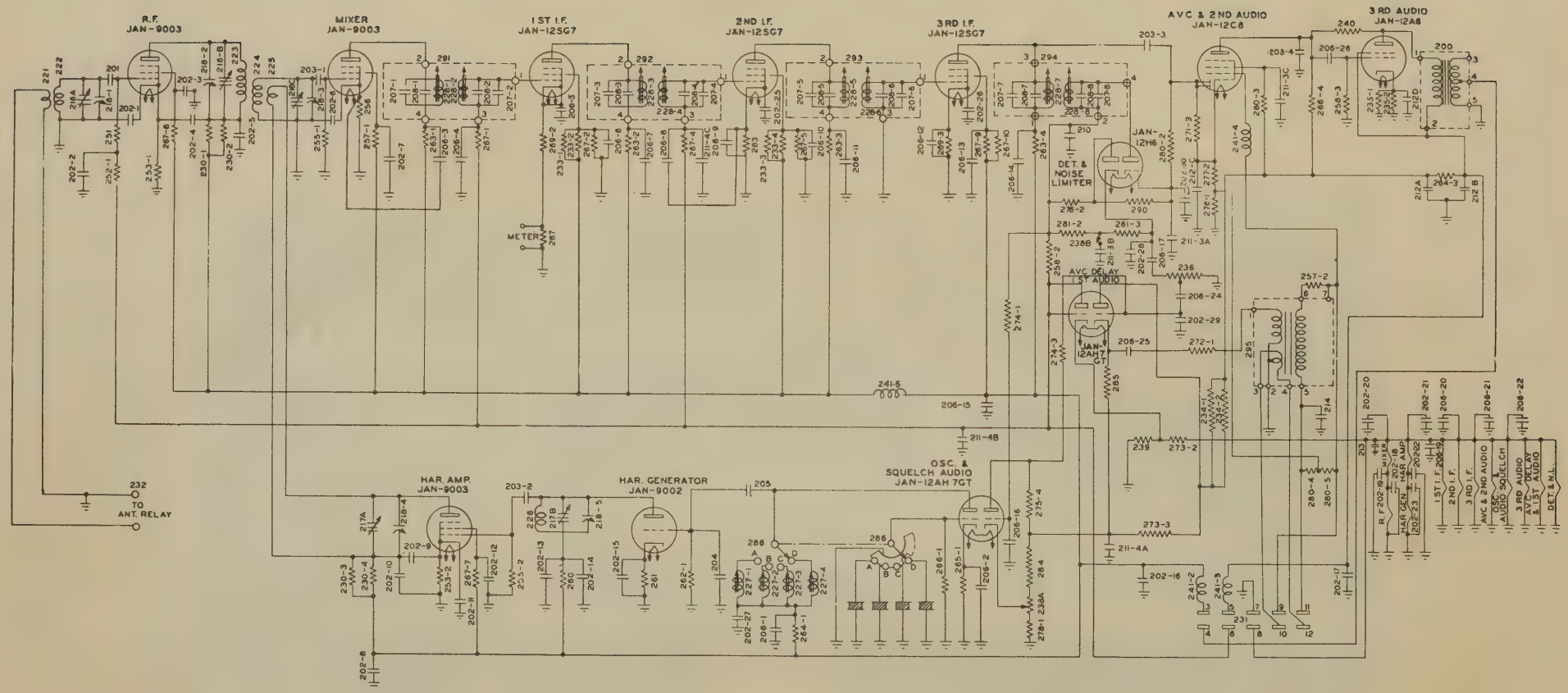

SCHEMATIC DIAGRAM RADIO RECEIVER BC-624 (SCR-522)

RADIO RECEIVER BC-652

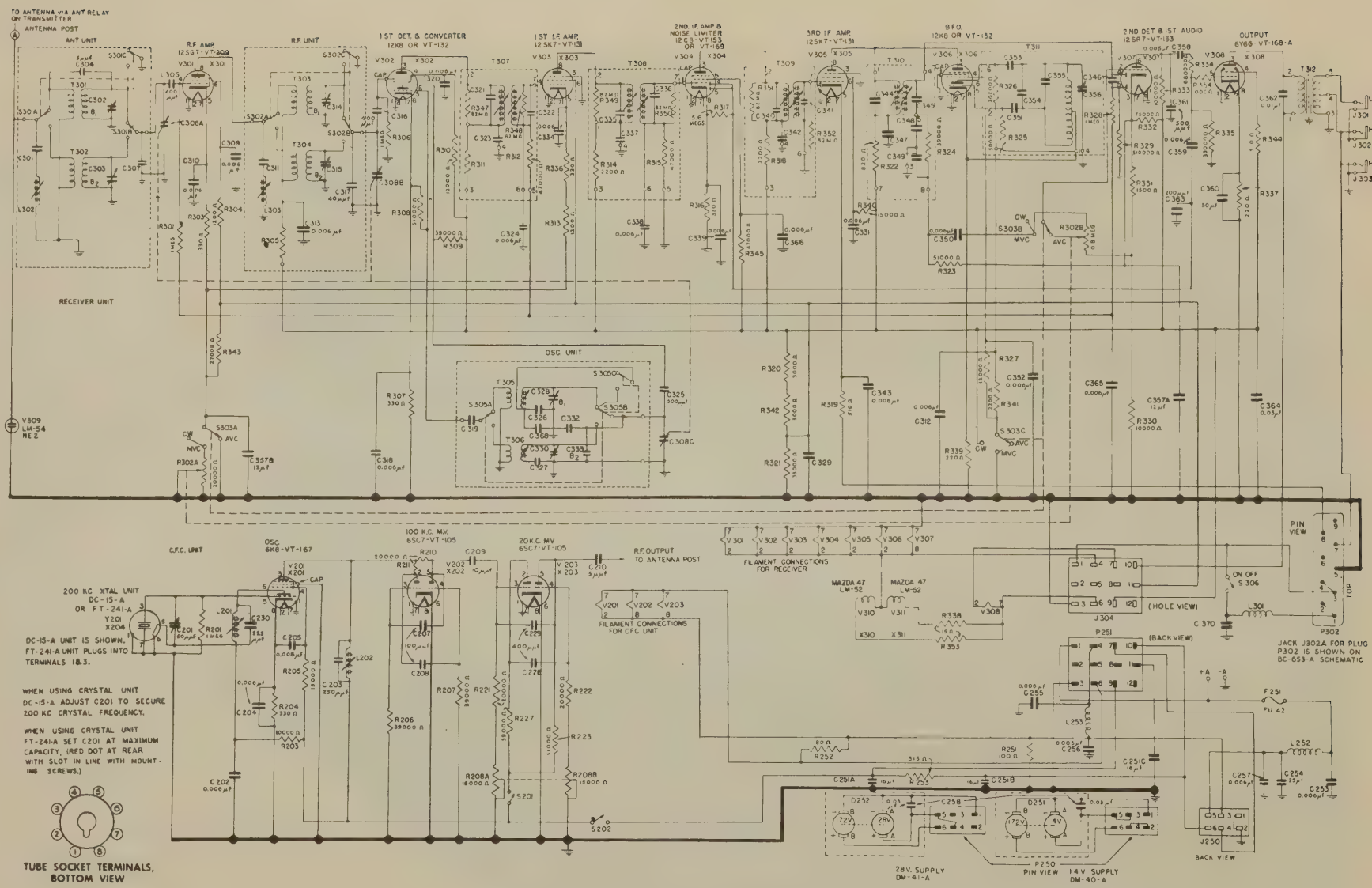

SCHEMATIC DIAGRAM RADIO RECEIVER BC-652

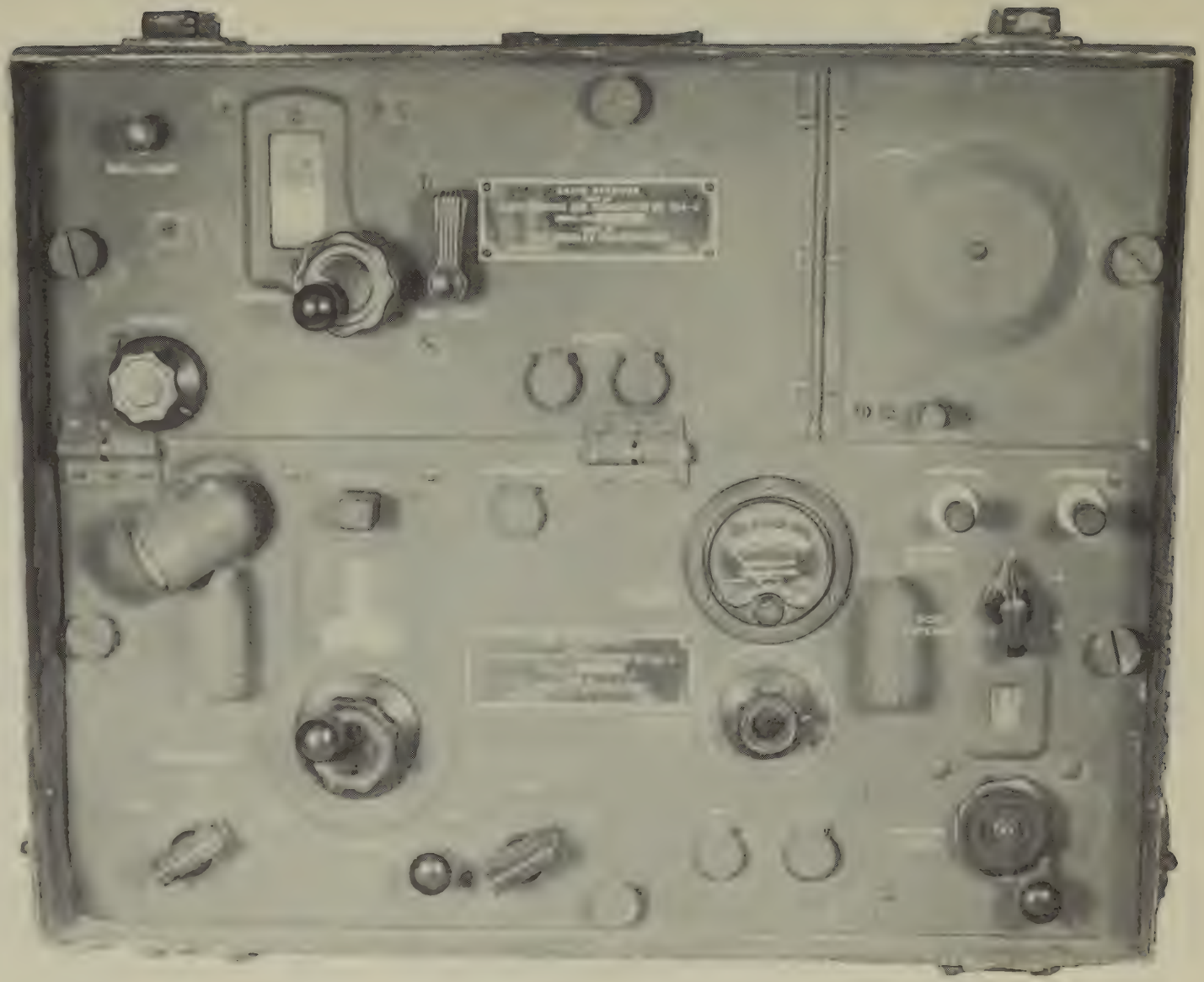

RADIO RECEIVER AND TRANSMITTER BC-654

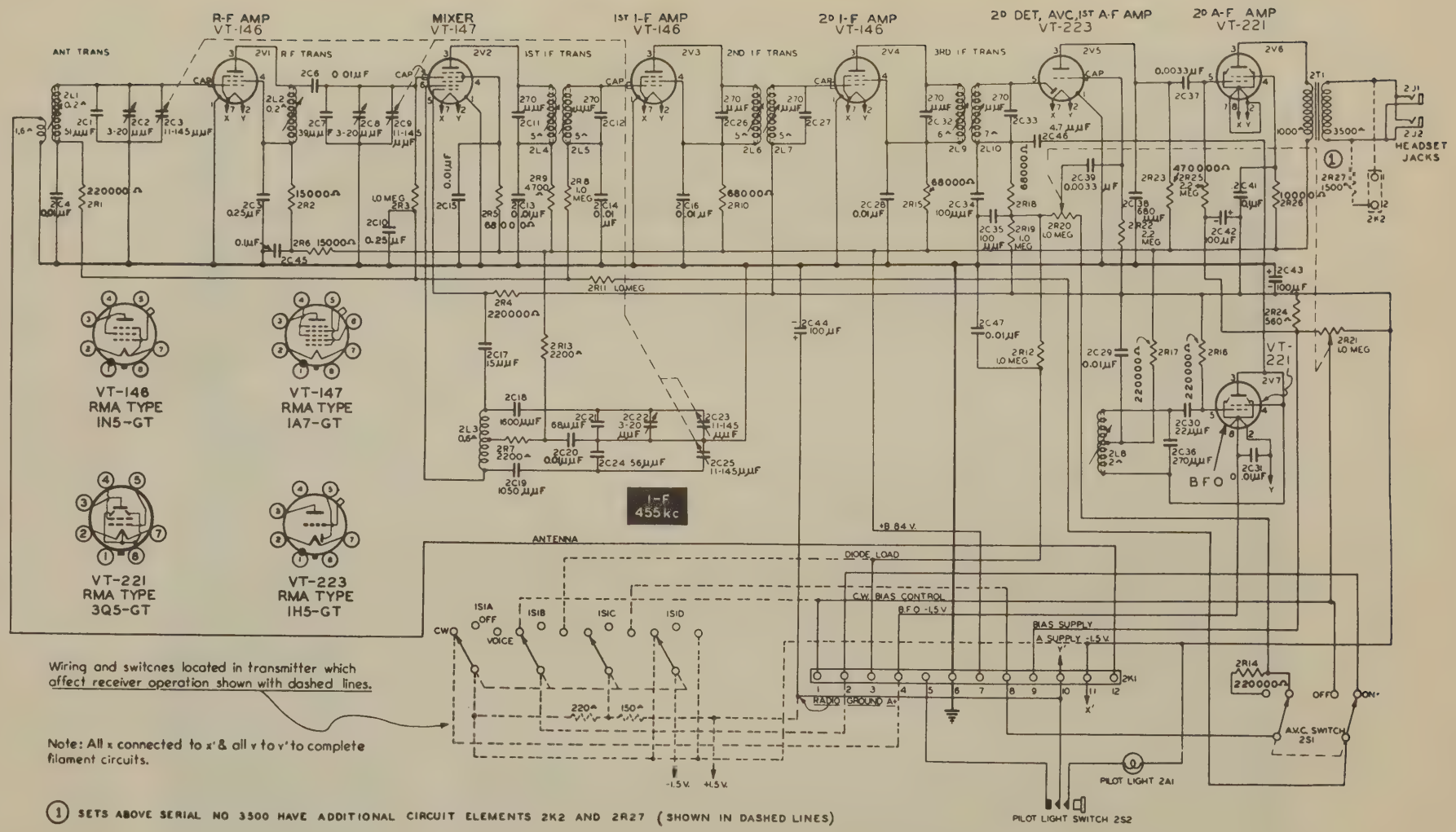

SCHEMATIC DIAGRAM RADIO RECEIVER AND TRANSMITTER BC-654

RADIO RECEIVER AND TRANSMITTER BC-659

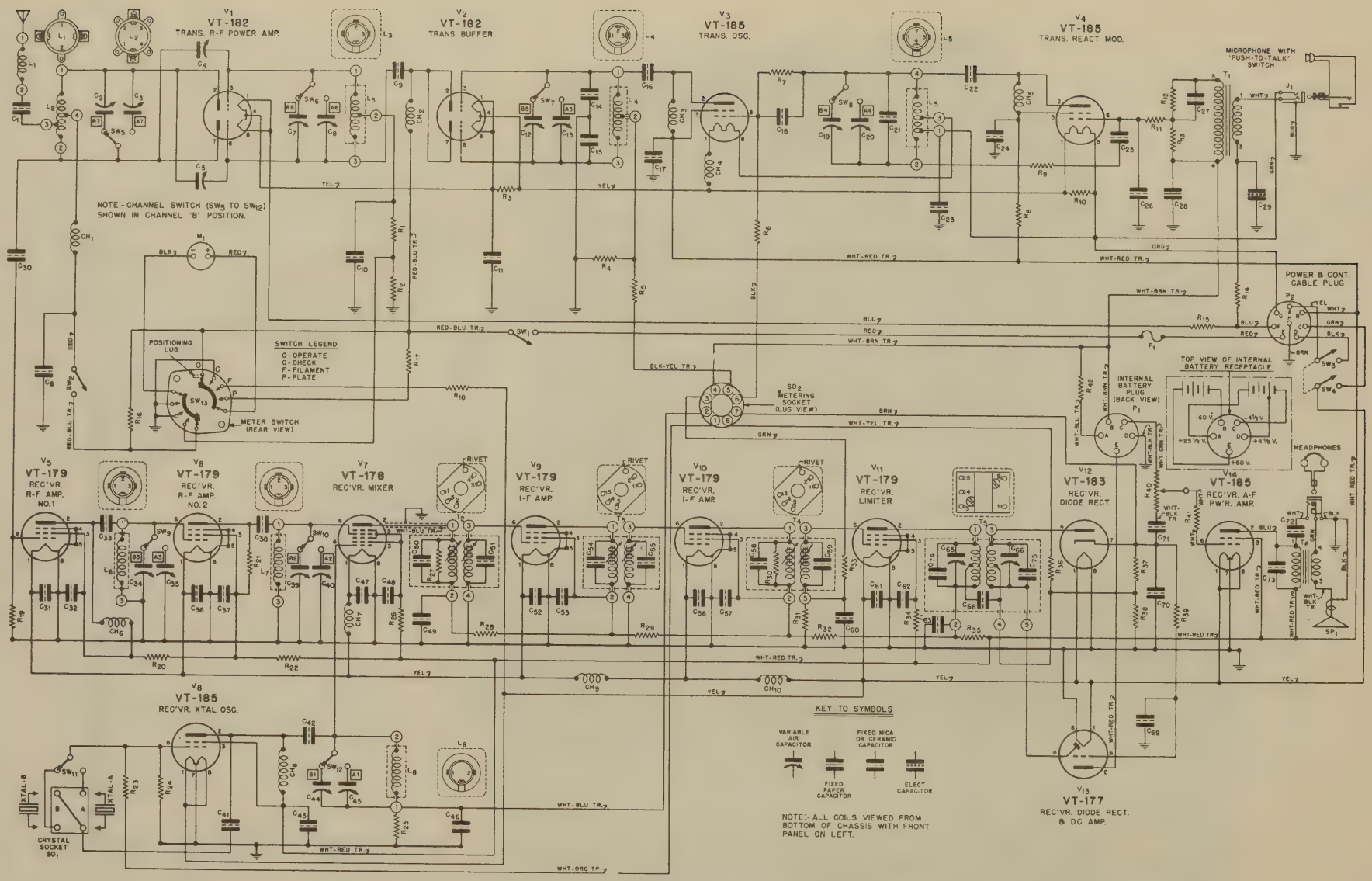

SCHEMATIC DIAGRAM RADIO RECEIVER AND TRANSMITTER BC-659

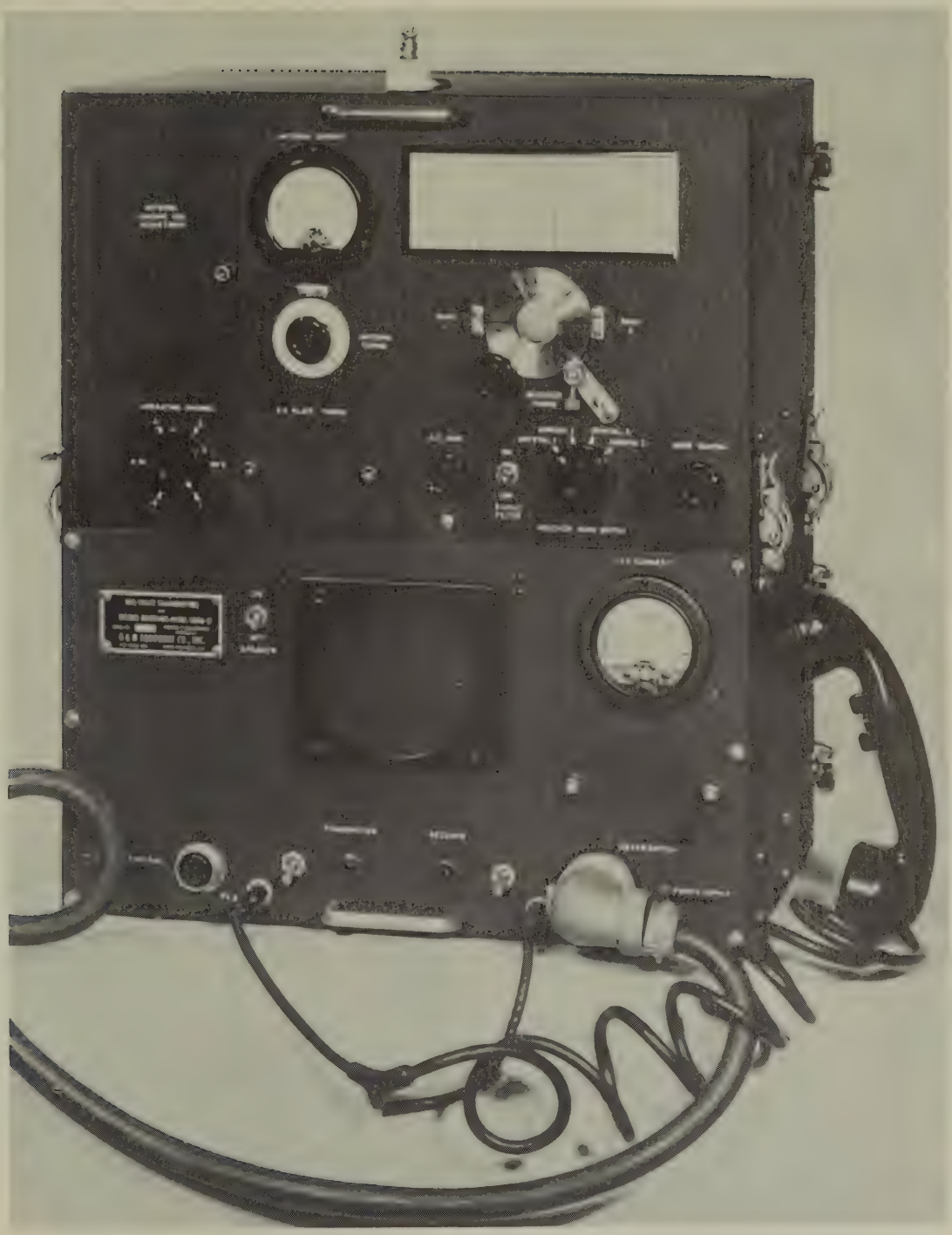

RADIO RECEIVER AND TRANSMITTER BC-669

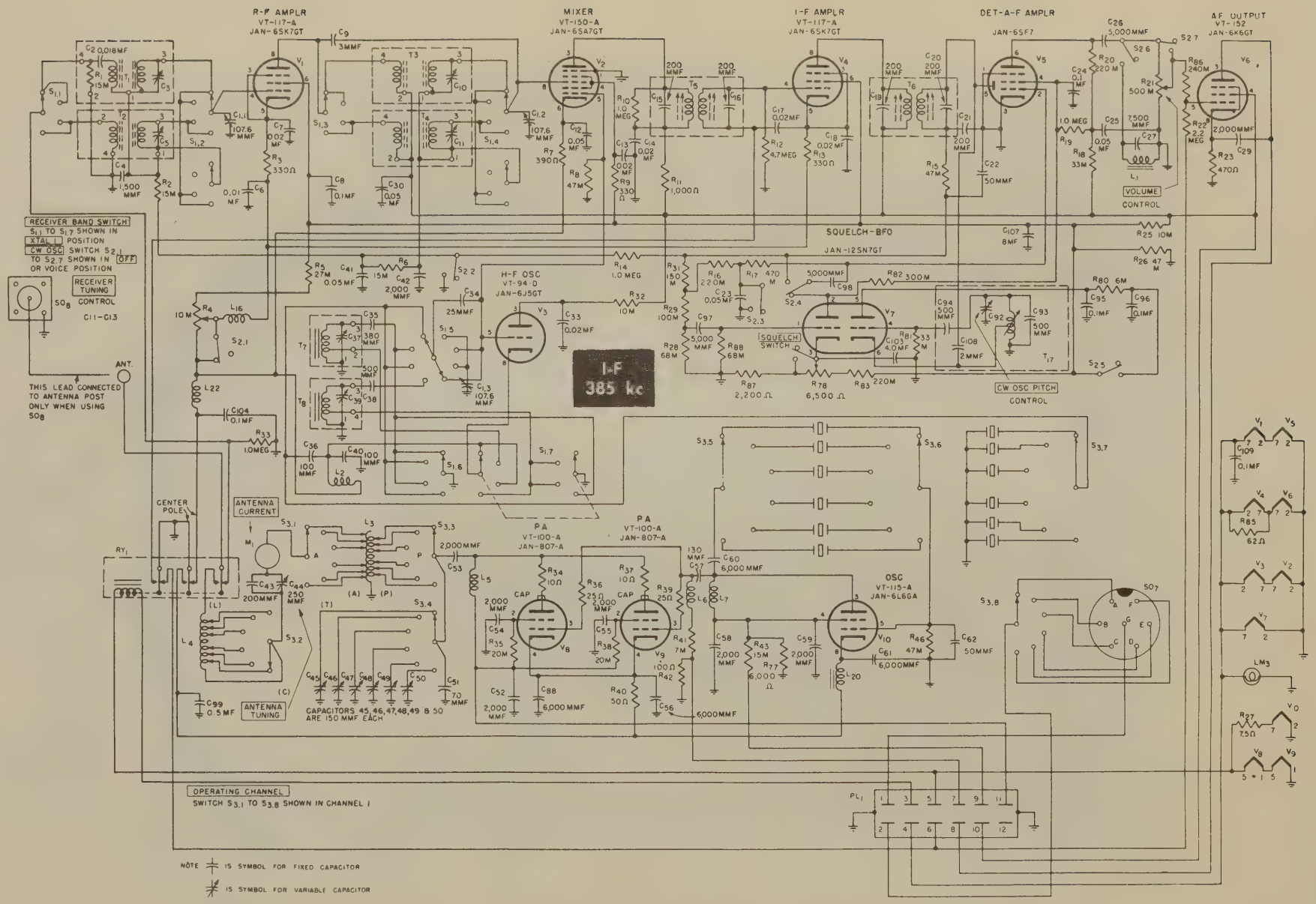

SCHEMATIC DIAGRAM RADIO RECEIVER AND TRANSMITTER BC-669

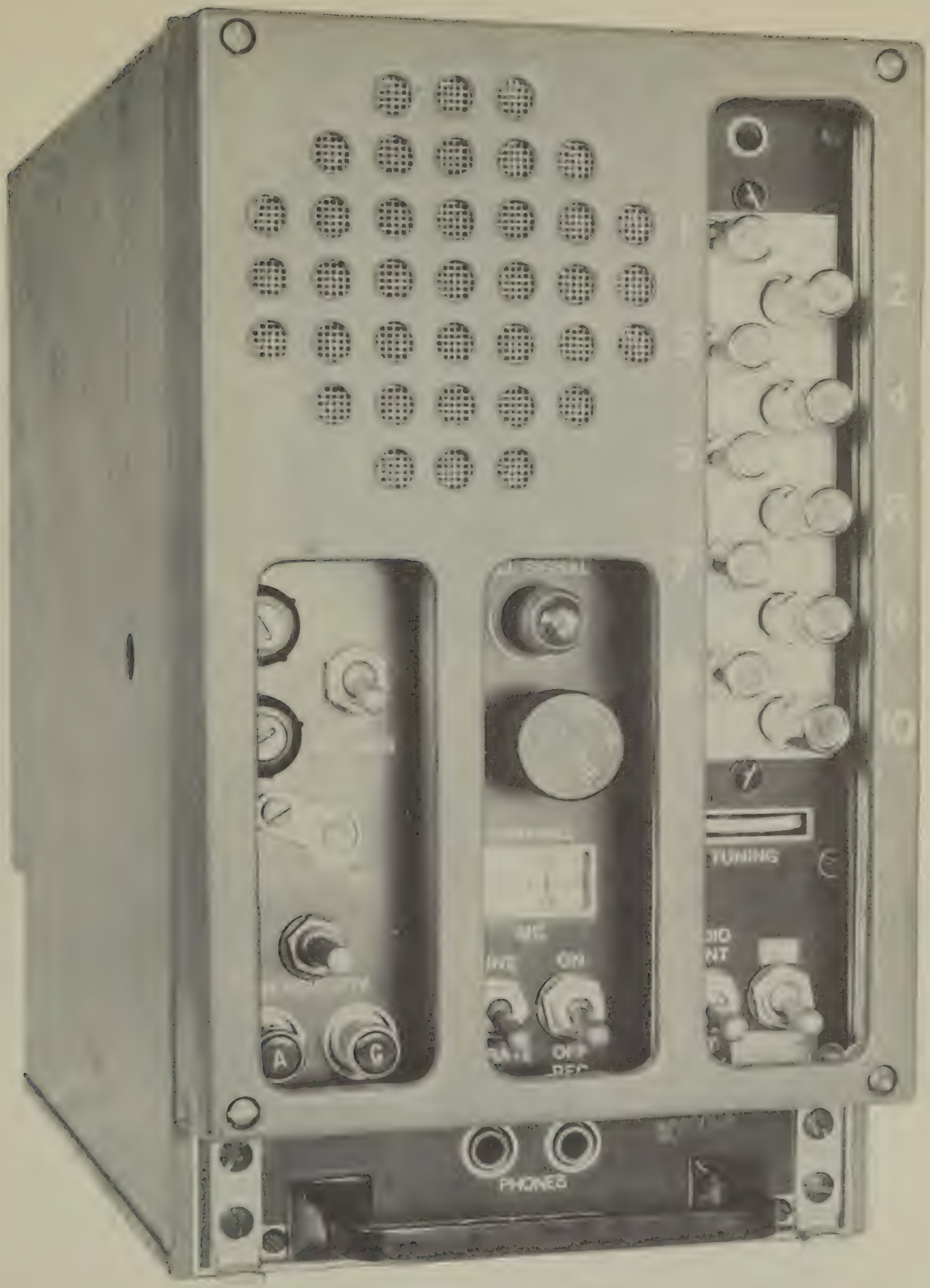

RADIO RECEIVER BC-683

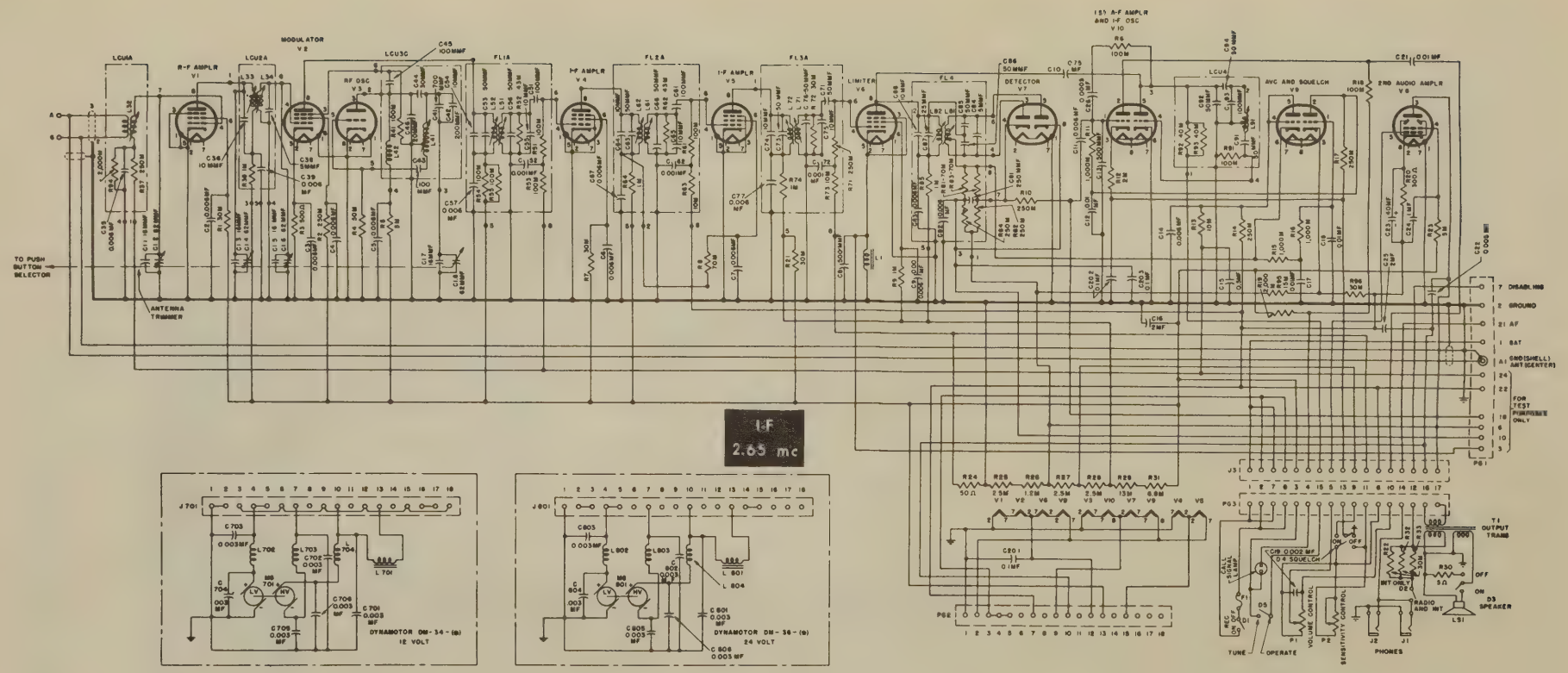

TUBE SOCKET TERMINALS, BOTTOM VIEW

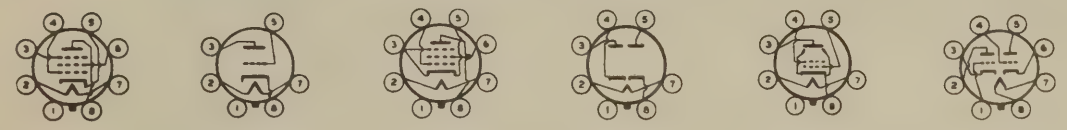

JAN-6AC7 JAN-6J5 JAN-12SG7 JAN-6H6 JAN-6V6GT/G JAN-6SL7GT

BC-683-A MODIFICATION

R94 NOT USED

R95-R96 NOT USED

V9 CATHODE CONNECTED TO JUNCTION OF R25-R26

BC-683-BM MODIFICATION

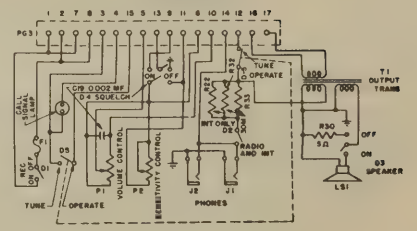

SCHEMATIC DIAGRAM RADIO RECEIVER BC-683

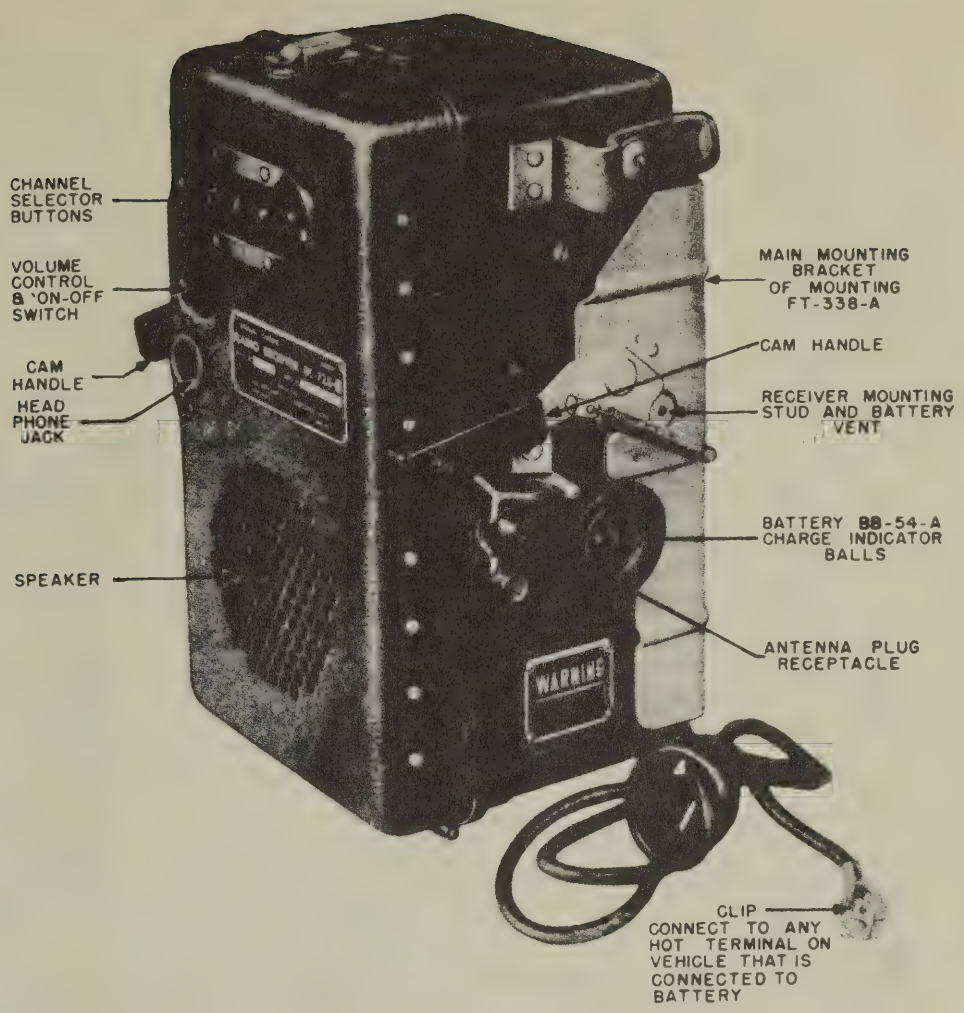

RADIO RECEIVER BC-728

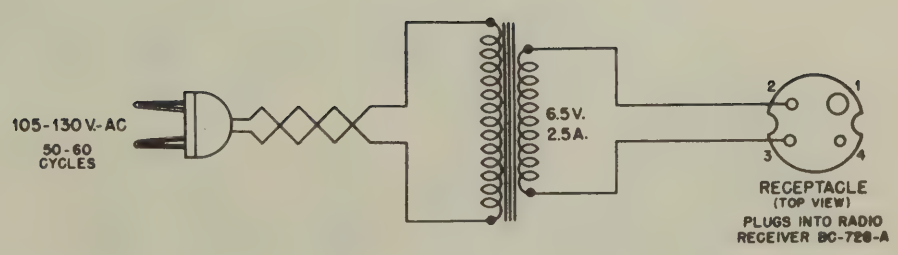

A.C. CHARGER FOR BC-728

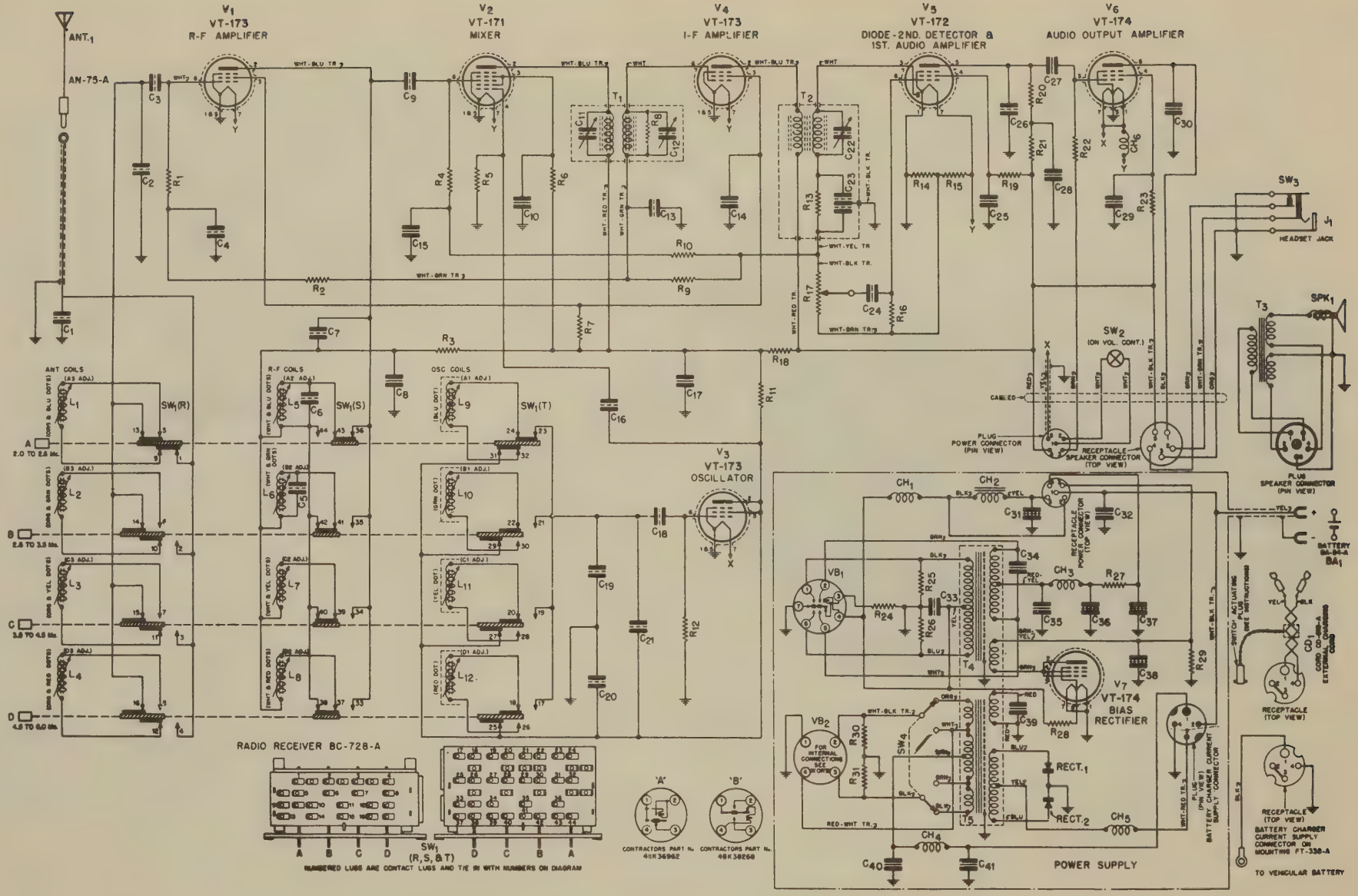

SCHEMATIC DIAGRAM RADIO RECEIVER BC-728

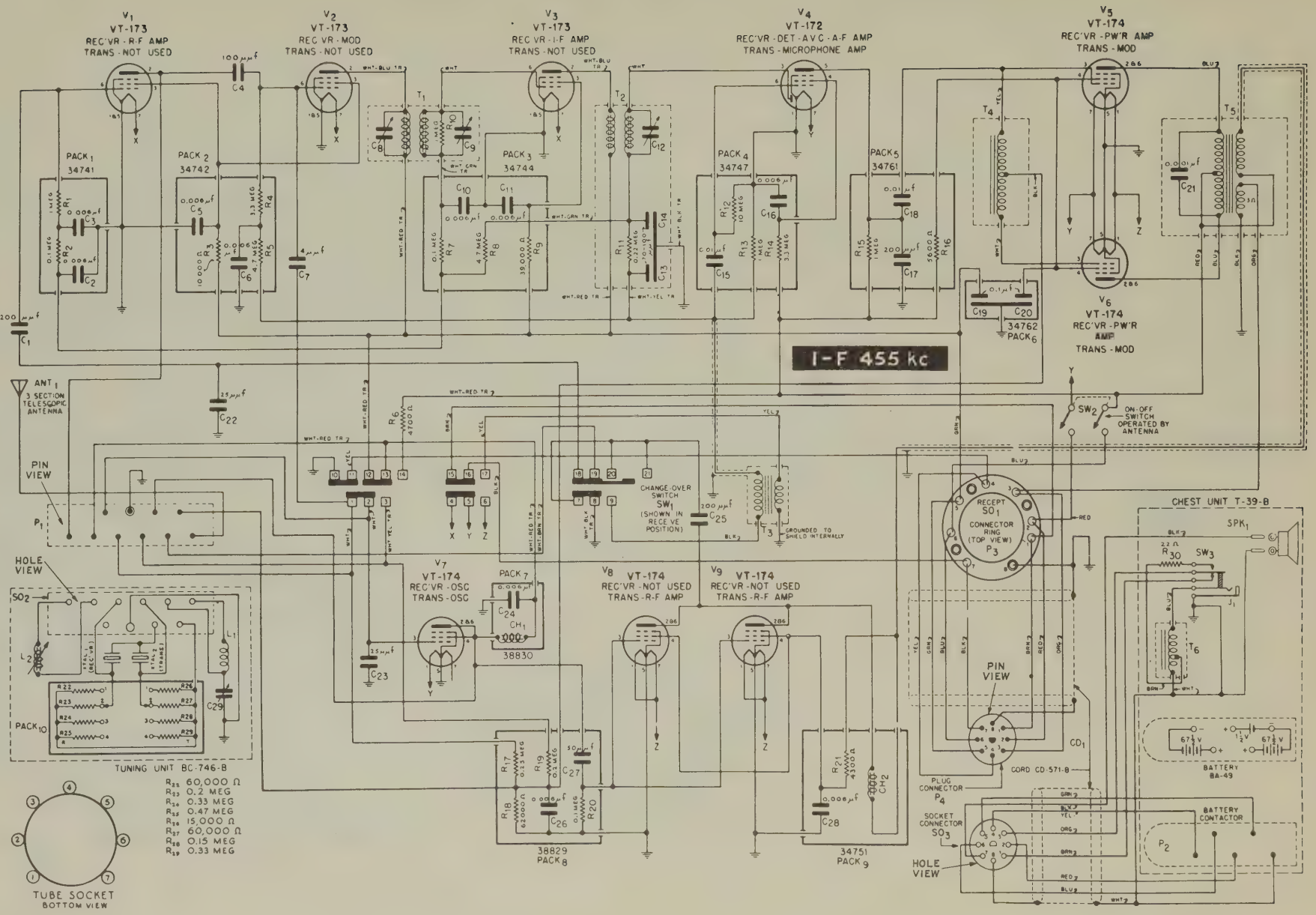

SCHEMATIC DIAGRAM RADIO RECEIVER AND TRANSMITTER BC-745

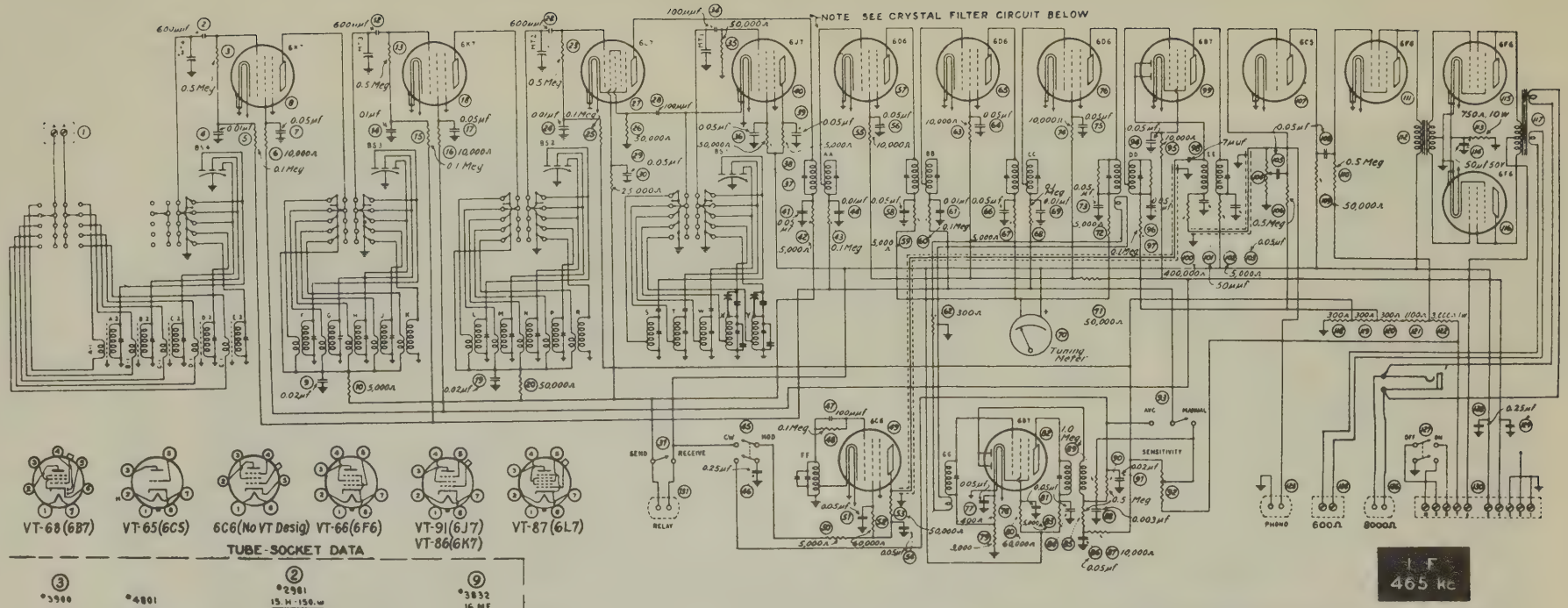

TUBE-SOCKET DATA

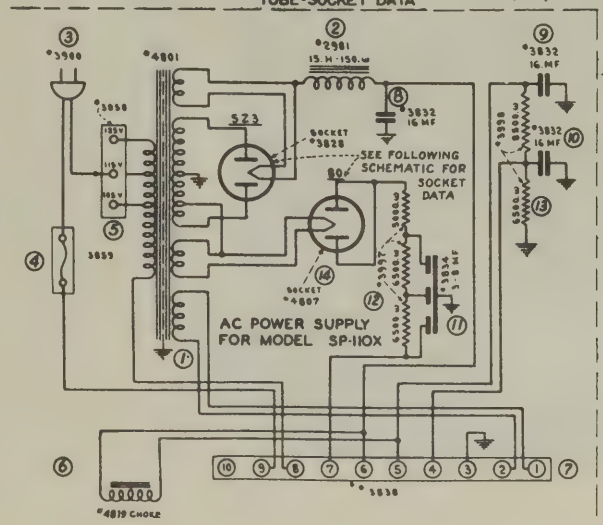

TOP CHASSIS VIEW, SP-110 & SP 120 MODELS

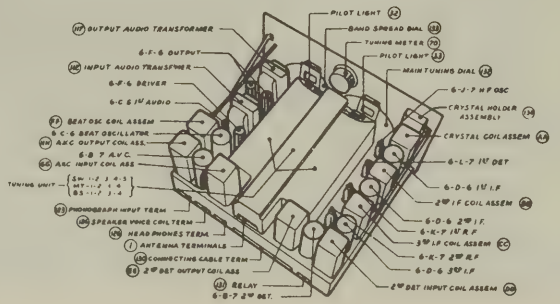

CRYSTAL FILTER CIRCUIT INCLUDED IN SP-110X

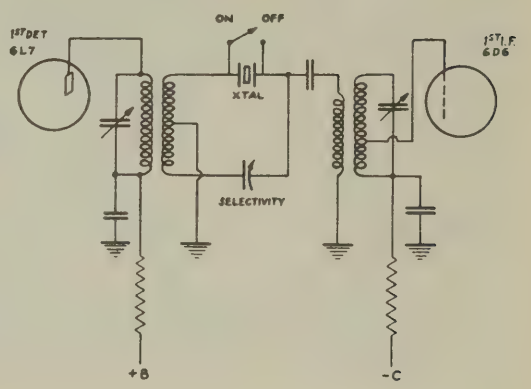

SCHEMATIC DIAGRAM RADIO RECEIVER BC-764, BC-779, BC-794 BC-1004 AND SUPER PRO

RADIO RECEIVER BC-923

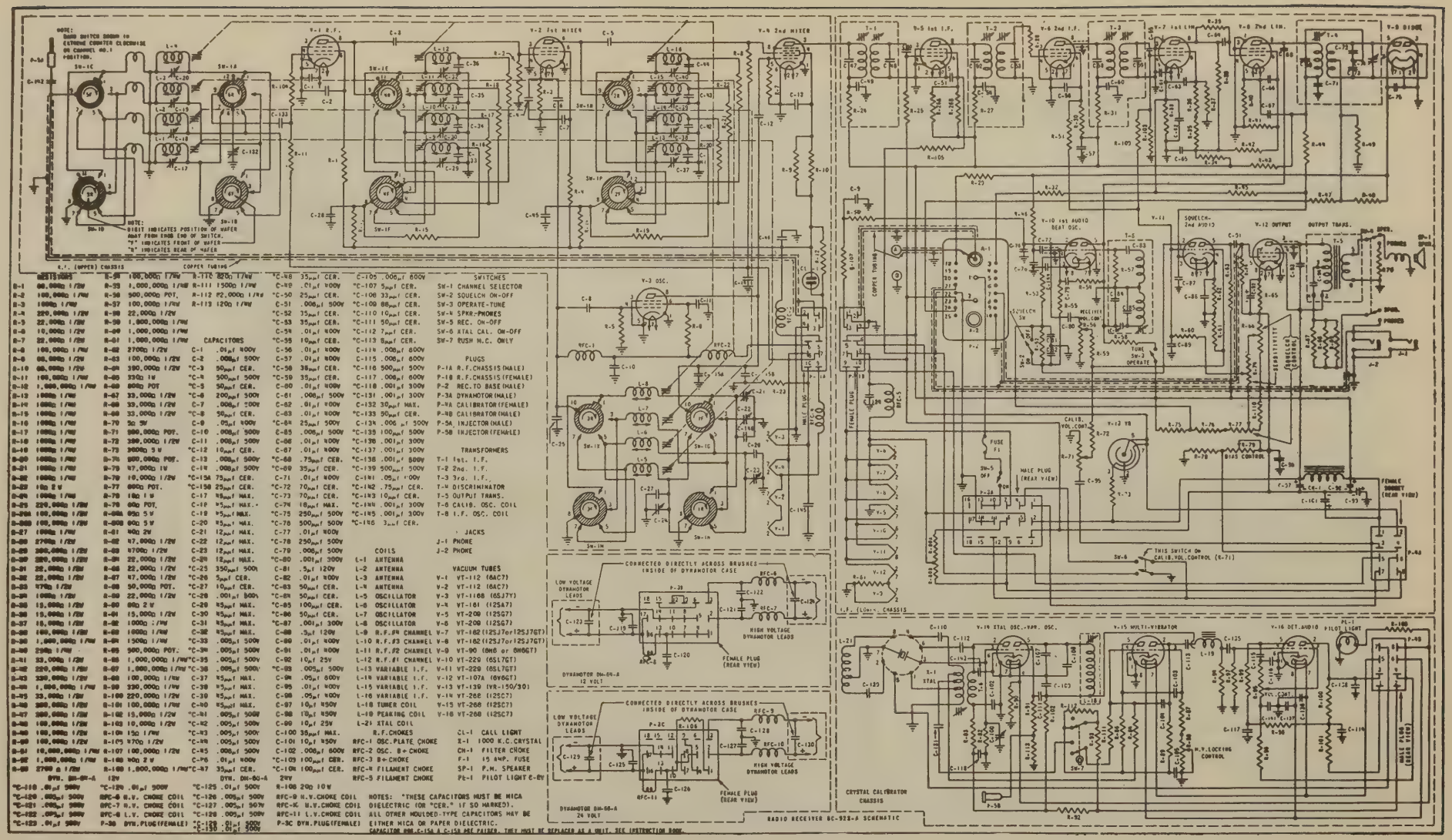

	RESISTORS	R-56	100,000Ω 1/2W	R-110	820Ω 1/2W	*C-48	35μμf CER.	C-105	.006μf 600V		SWITCHES		
R-1	68,000Ω 1/2W	R-57	1,000,000Ω 1/2W	R-111	1500Ω 1/2W	C-49	.01μf 400V	*C-107	5μμf CER.	SW-1	CHANNEL SELECTOR		
R-2	100,000Ω 1/2W	R-58	500,000Ω POT.	R-112	2,000Ω 1/2W	*C-50	25μμf CER.	*C-108	33μμf CER.	SW-2	SQUELCH ON-OFF		
R-3	100Ω 1/2W	R-59	100,000Ω 1/2W	R-113	120Ω 1/2W	C-51	.006μf 500V	*C-109	86μμf CER.	SW-3	OPERATE-TUNE		
R-4	220,000Ω 1/2W	R-60	22,000Ω 1/2W			*C-52	35μμf CER.	*C-110	10μμf CER.	SW-4	SPKR-PHONES		
R-5	22,000Ω 1/2W	R-61	1,000,000Ω 1/2W			*C-53	35μμf CER.	*C-111	50μμf CER.	SW-5	REC. ON-OFF		
R-6	10,000Ω 1/2W	R-62	1,000,000Ω 1/2W			C-54	.01μf 400V	*C-112	7μμf CER.	SW-6	XTAL CAL. ON-OFF		
R-7	22,000Ω 1/2W	R-63	1,000,000Ω 1/2W		CAPACITORS	*C-55	10μμf CER.	*C-113	8μμf CER.	SW-7	RUSH N.C. ONLY		
R-8	100,000Ω 1/2W	R-64	270Ω 1/2W	C-1	.01μf 400V	C-56	.01μf 400V	C-114	.006μf 600V				
R-9	68,000Ω 1/2W	R-65	100,000Ω 1/2W	C-2	.008μf 500V	C-57	.01μf 400V	C-115	.006μf 600V		PLUGS		
R-10	68,000Ω 1/2W	R-66	390,000Ω 1/2W	*C-3	50μμf CER.	*C-58	38μμf CER.	*C-116	500μμf 500V	P-1A	R.F.CHASSIS(MALE)		
R-11	100,000Ω 1/2W	R-67	33Ω 1W	*C-4	500μμf 500V	*C-59	35μμf CER.	C-117	.006μf 600V	P-1B	R.F.CHASSIS(FEMALE)		
R-12	1,000,000Ω 1/2W	R-68	500Ω POT	*C-5	50μμf CER.	*C-60	.01μf 400V	*C-118	.001μf 300V	P-2	REC.TO BASE(MALE)		
R-13	100Ω 1/2W	R-69	33,000Ω 1/2W	*C-6	200μμf 500V	*C-61	.008μf 500V	*C-131	.001μf 300V	P-3A	DYNAMOTOR(MALE)		
R-14	100Ω 1/2W	R-70	33,000Ω 1/2W	C-7	.008μf 500V	*C-62	.01μf 400V	*C-132	30μμf MAX.	P-4A	CALIBRATOR(FEMALE)		
R-15	100Ω 1/2W	R-71	33,000Ω 1/2W	*C-8	50μμf CER.	*C-63	.01μf 400V	*C-133	50μμf CER.	P-4B	CALIBRATOR(MALE)		
R-16	100Ω 1/2W	R-72	5Ω 5W	C-9	.05μf 400V	*C-64	25μμf 500V	*C-134	.006μf 500V	P-5A	INJECTOR(MALE)		
R-17	100Ω 1/2W	R-73	500,000Ω POT.	C-10	.008μf 500V	*C-65	100μμf 500V	*C-135	100μμf 500V	P-5B	INJECTOR(FEMALE)		
R-18	100Ω 1/2W	R-74	390,000Ω 1/2W	C-11	.008μf 500V	C-66	.01μf 400V	*C-136	.001μf 300V				
R-19	100Ω 1/2W	R-75	360Ω 5W	*C-12	10μμf CER.	C-67	.01μf 400V	*C-137	.001μf 300V		TRANSFORMERS		
R-20	100Ω 1/2W	R-76	500,000Ω POT.	C-13	.008μf 500V	*C-68	.75μμf CER.	*C-138	.001μf 500V	T-1	1st. I.F.		
R-21	100Ω 1/2W	R-77	47,000Ω 1W	C-14	.008μf 500V	*C-69	35μμf CER.	*C-139	500μμf 500V	T-2	2nd. I.F.		
R-22	100Ω 1/2W	R-78	10,000Ω 1/2W	*C-15A	75μμf CER.	C-71	.01μf 400V	C-141	.05μf 400V	T-3	3rd. I.F.		
R-23	10Ω 5W	R-79	500Ω POT.	*C-15B	25μμf CER.	*C-72	70μμf CER.	*C-142	.75μμf CER.	T-4	DISCRIMINATOR		
R-24	100Ω 1/2W	R-80	10Ω 1W	C-17	45μμf MAX.	*C-73	70μμf CER.	*C-143	10μμf CER.	T-5	OUTPUT TRANS.		
R-25	220,000Ω 1/2W	R-81	50Ω POT.	C-18	45μμf MAX.	*C-74	18μμf MAX.	*C-144	.001μf 300V	T-6	CALIB. OSC. COIL		
R-26A	100,000Ω 1/2W	R-82A	95Ω 5W	C-19	45μμf MAX.	*C-75	250μμf 500V	*C-145	.001μf 300V	T-8	I.F. OSC. COIL		
R-26B	100,000Ω 1/2W	R-82B	60Ω 5W	C-20	45μμf MAX.	*C-76	500μμf 500V	*C-146	3μμf CER.				
R-27	100Ω 1/2W	R-81	40Ω 2W	C-21	12μμf MAX.	C-77	.01μf 400V				JACKS		
R-28	270Ω 1/2W	R-82	47,000Ω 1/2W	C-22	12μμf MAX.	*C-78	250μμf 500V			J-1	PHONE		
R-29	200,000Ω 1/2W	R-83	470Ω 1/2W	C-23	12μμf MAX.	*C-79	.008μf 500V		COILS	J-2	PHONE		
R-30	220,000Ω 1/2W	R-84	22,000Ω 1/2W	C-24	12μμf MAX.	*C-80	.001μf 300V	L-1	ANTENNA				
R-31	22,000Ω 1/2W	R-85	22,000Ω 1/2W	*C-25	350μμf 500V	C-81	.5μf 120V	L-2	ANTENNA		VACUUM TUBES		
R-32	22,000Ω 1/2W	R-87	47,000Ω 1/2W	*C-26	5μμf CER.	C-82	.01μf 400V	L-3	ANTENNA	V-1	VT-112 (6AC7)		
R-33	470Ω 1/2W	R-88	50,000Ω POT.	*C-27	10μμf CER.	*C-83	50μμf CER.	L-4	ANTENNA	V-2	VT-112 (6AC7)		
R-34	100Ω 1/2W	R-89	22,000Ω 1/2W	*C-28	.001μf 500V	*C-84	50μμf CER.	L-5	OSCILLATOR	V-3	VT-116B (6SJ7Y)		
R-35	15,000Ω 1/2W	R-90	80Ω 2W	C-29	45μμf MAX.	*C-85	100μμf CER.	L-6	OSCILLATOR	V-4	VT-181 (12SA7)		
R-36	15,000Ω 1/2W	R-91	15,000Ω 1/2W	*C-30	45μμf MAX.	*C-86	50μμf CER.	L-7	OSCILLATOR	V-5	VT-209 (12SG7)		
R-37	15,000Ω 1/2W	R-92	1000Ω 1/2W	C-31	45μμf MAX.	*C-87	.001μf 300V	L-8	OSCILLATOR	V-6	VT-209 (12SG7)		
R-38	100,000Ω 1/2W	R-93	15000Ω 1/2W	C-32	45μμf MAX.	C-88	.5μf 120V	L-9	R.F.#4 CHANNEL	V-7	VT-162 (12SJ7 or 12SJ7GT)		
R-39	1,000,000Ω 1/2W	R-94	15000Ω 1/2W	*C-33	.005μf 500V	C-89	.01μf 400V	L-10	R.F.#3 CHANNEL	V-8	VT-162 (12SJ7 or 12SJ7GT)		
R-40	220Ω 1/2W	R-95	500,000Ω POT.	*C-34	.005μf 500V	C-91	.01μf 400V	L-11	R.F.#2 CHANNEL	V-9	VT-90 (6N6 or 6N6GT)		
R-41	33,000Ω 1/2W	R-96	1,000,000Ω 1/2W	*C-35	.005μf 500V	C-92	10μf 25V	L-12	R.F.#1 CHANNEL	V-10	VT-229 (6SL7GT)		
R-42	220,000Ω 1/2W	R-97	1,000,000Ω 1/2W	*C-36	.005μf 500V	*C-93	.005μf 500V	L-13	VARIABLE I.F.	V-11	VT-229 (6SL7GT)		
R-43	330,000Ω 1/2W	R-98	100,000Ω 1/2W	C-37	45μμf MAX.	C-94	.05μf 600V	L-14	VARIABLE I.F.	V-12	VT-107A (6V6GT)		
R-44	1,000,000Ω 1/2W	R-99	330,000Ω 1/2W	C-38	45μμf MAX.	C-95	.01μf 400V	L-15	VARIABLE I.F.	V-13	VT-139 (VR-150/30)		
R-45	33,000Ω 1/2W	R-100	220,000Ω 1/2W	C-39	45μμf MAX.	C-96	.05μf 400V	L-16	VARIABLE I.F.	V-14	VT-268 (12SC7)		
R-46	200,000Ω 1/2W	R-101	100,000Ω 1/2W	C-40	45μμf MAX.	C-97	10μf 450V	L-18	TUNER COIL	V-15	VT-268 (12SC7)		
R-47	200,000Ω 1/2W	R-102	15,000Ω 1/2W	C-41	.005μf 500V	C-98	10μf 450V	L-19	PEAKING COIL	V-16	VT-268 (12SC7)		
R-48	100,000Ω 1/2W	R-103	10,000Ω 1/2W	*C-42	.005μf 500V	C-99	10μf 25V	L-21	XTAL COIL				
R-49	100,000Ω 1/2W	R-104	15Ω 1/2W	*C-43	.005μf 500V	C-100	30μμf MAX.		R.F.CHOKES	CL-1	CALL LIGHT		
R-50	100,000Ω 1/2W	R-105	470Ω 1/2W	*C-44	.005μf 500V	C-101	10μf 450V	RFC-1	OSC.PLATE CHOKE	X-1	1000 K.C.CRYSTAL		
R-51	10,000,000Ω 1/2W	R-107	100,000Ω 1/2W	C-45	.006μf 500V	C-102	.008μf 600V	RFC-2	OSC. B+ CHOKE	CH-1	FILTER CHOKE		
R-52	1,000,000Ω 1/2W	R-108	40Ω 2W	C-46	.01μf 400V	*C-103	100μμf CER.	RFC-3	B+ CHOKE	F-1	15 AMP. FUSE		
R-53	2700Ω 1/2W	R-109	1,000,000Ω 1/2W	*C-47	35μμf CER.	*C-104	100μμf CER.	RFC-4	FILAMENT CHOKE	SP-1	P.M. SPEAKER		
	DYN. DM-50-A 12V				DYN. DM-50-A 24V			RFC-5	FILAMENT CHOKE	PL-1	PILOT LIGHT E-8V		
*C-110	.01μf 500V	*C-126	.01μf 500V	*C-125	.01μf 500V	R-106	20Ω 10W						
*C-120	.005μf 500V	RFC-6	H.V. CHOKE COIL	*C-126	.005μf 500V	RFC-9	H.V.CHOKE COIL						
*C-121	.005μf 500V	RFC-7	H.V. CHOKE COIL	*C-127	.005μf 500V	RFC-K	H.V.CHOKE COIL						
*C-122	.005μf 500V	RFC-8	L.V. CHOKE COIL	*C-128	.005μf 500V	RFC-11	L.V.CHOKE COIL						
*C-123	.01μf 500V	P-3B	DYN.PLUG(FEMALE)	*C-129	.01μf 500V	P-3C	DYN.PLUG(FEMALE)						
				*C-130	.01μf 500V								

NOTES: "THESE CAPACITORS MUST BE MICA DIELECTRIC (OR "CER." IF SO MARKED). ALL OTHER MOULDED-TYPE CAPACITORS MAY BE EITHER MICA OR PAPER DIELECTRIC. CAPACITOR RMS C-15A & C-15B ARE PAIRED. THEY MUST BE REPLACED AS A UNIT. SEE INSTRUCTION BOOK.

SCHEMATIC DIAGRAM RADIO RECEIVER BC-923

RADIO RECEIVER AND TRANSMITTER BC-1000

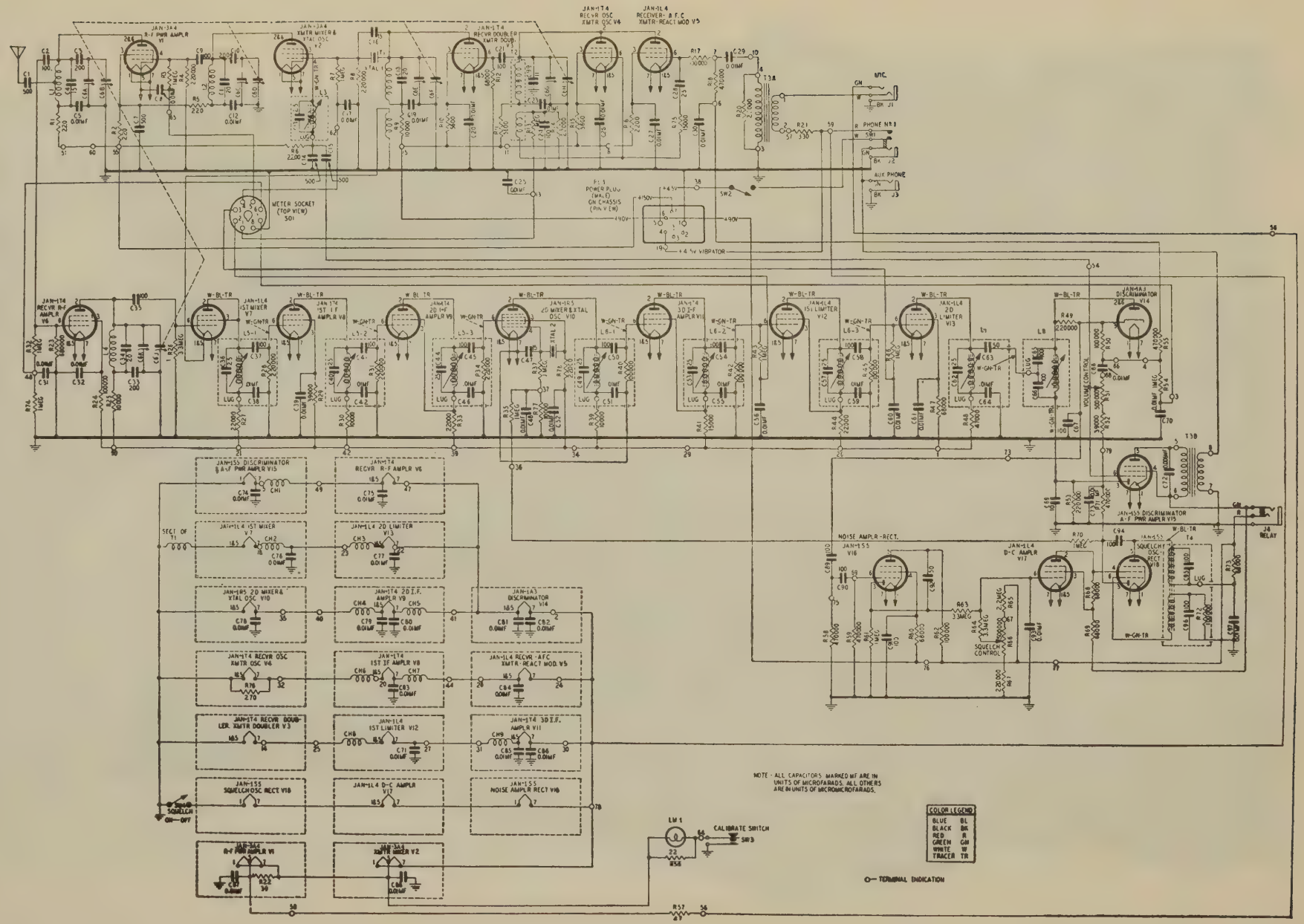

SCHEMATIC DIAGRAM RADIO RECEIVER AND TRANSMITTER BC-1000

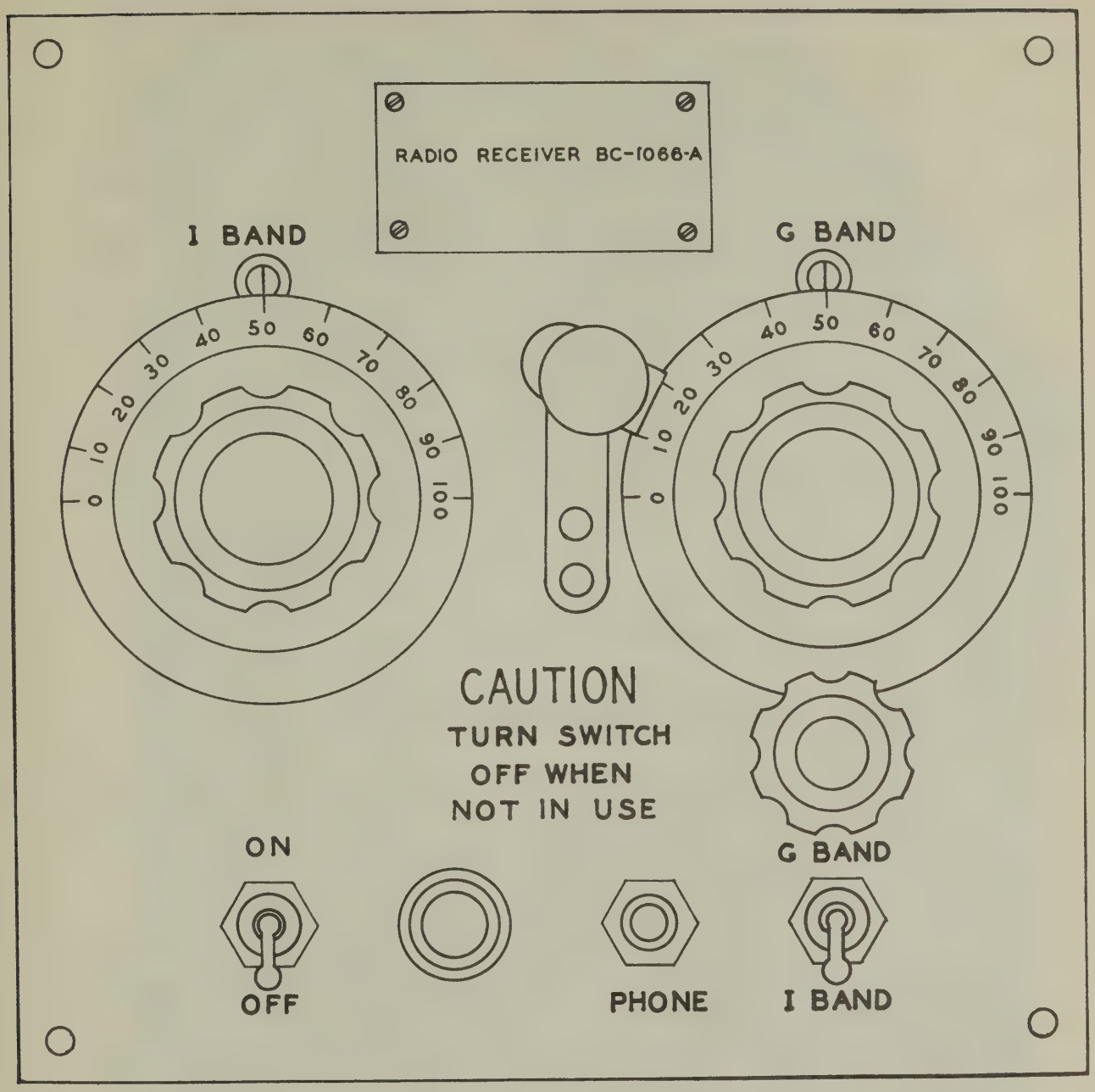

RADIO RECEIVER BC-1066

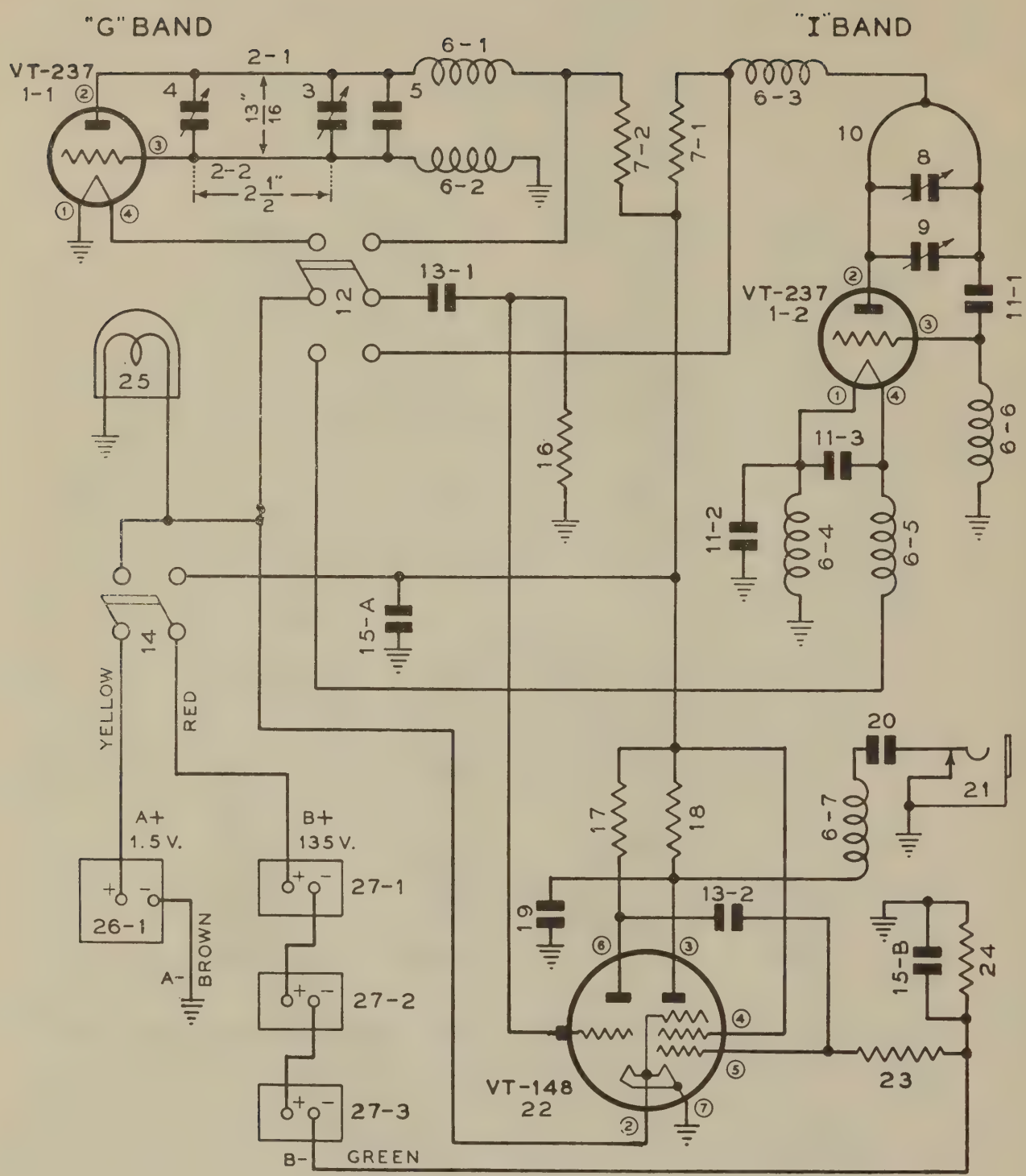

SCHEMATIC DIAGRAM RADIO RECEIVER BC-1066

RADIO RECEIVER BC-1206

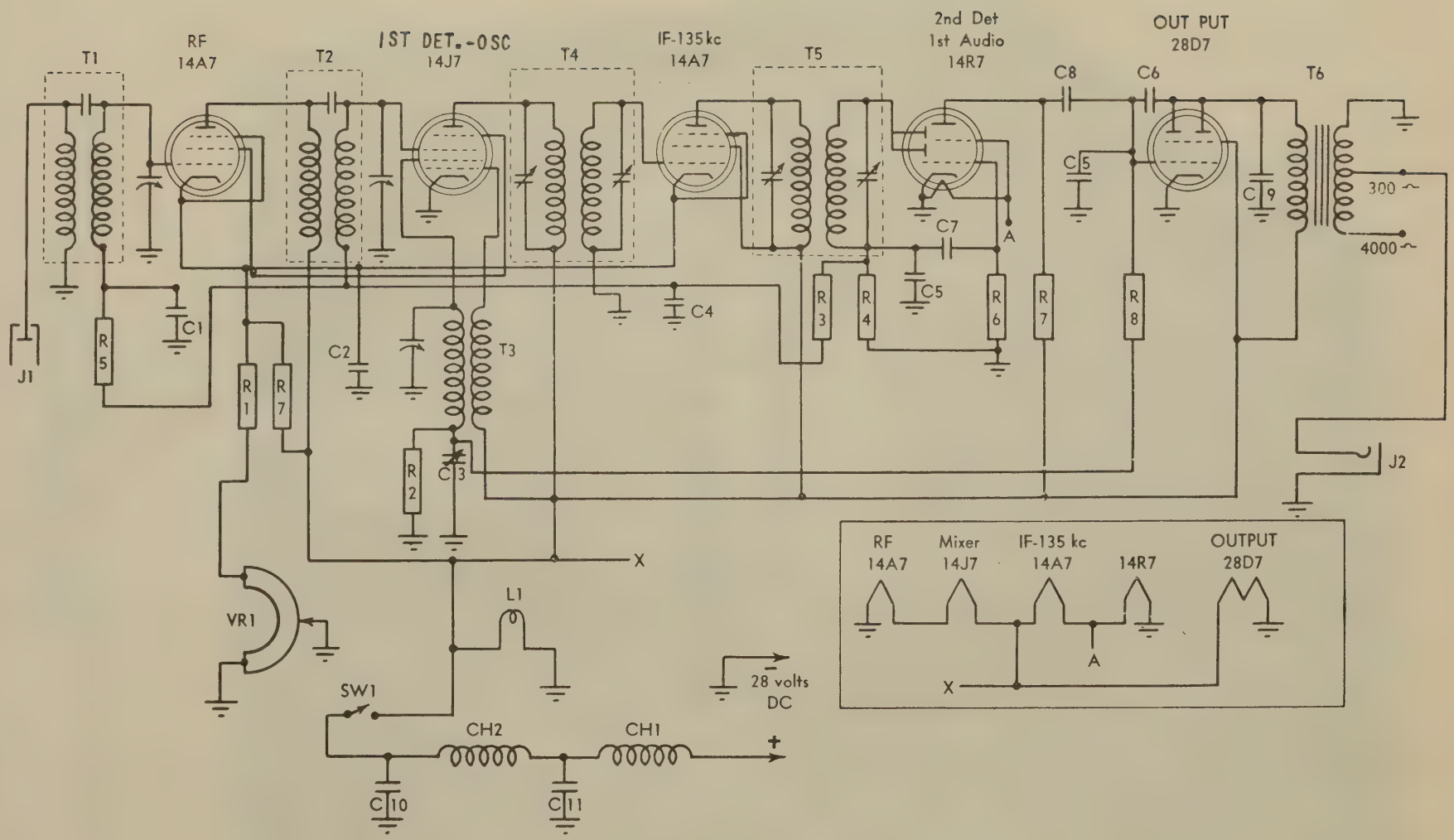

SCHEMATIC DIAGRAM RADIO RECEIVER BC-1206

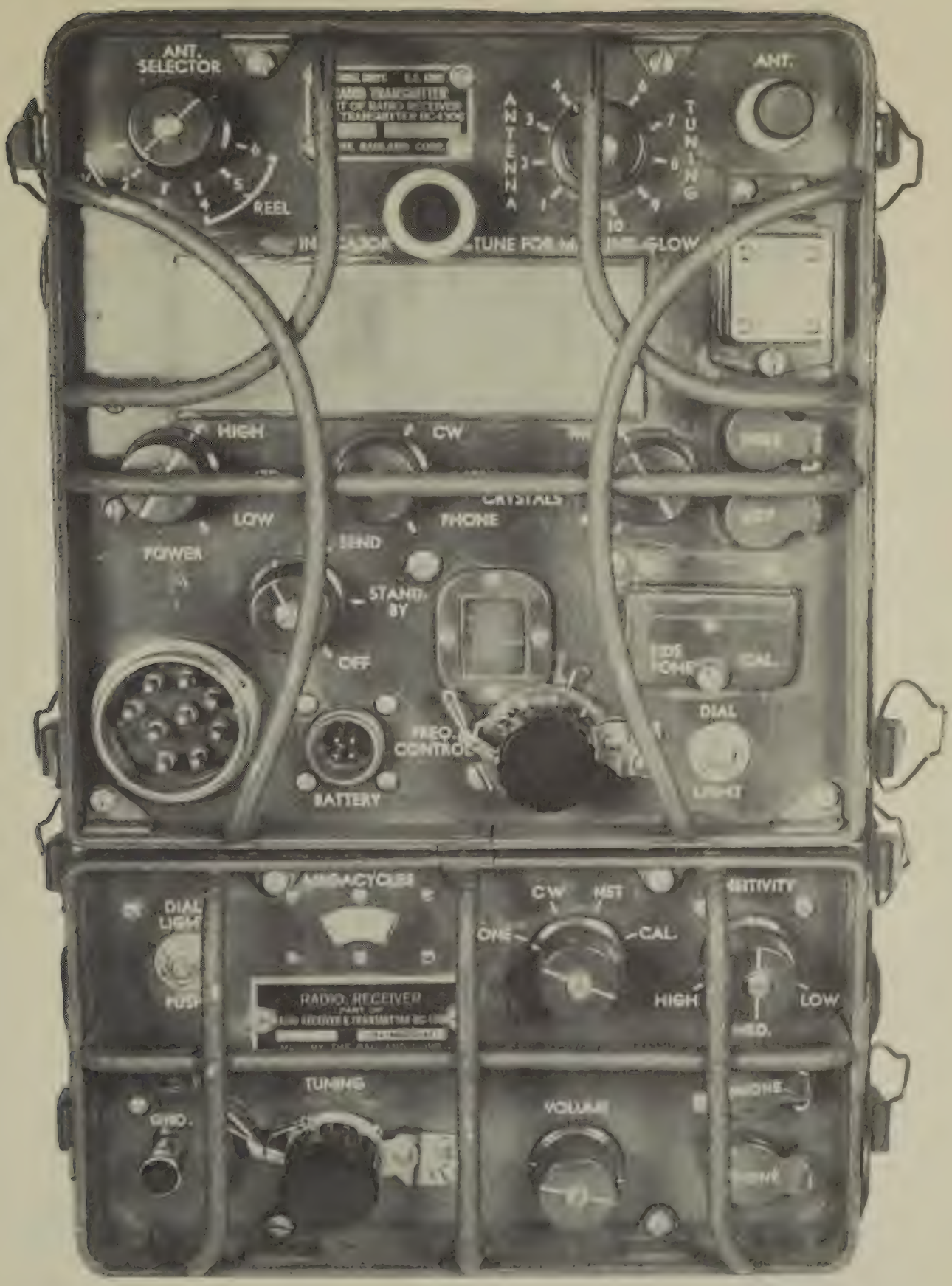

RADIO RECEIVER AND TRANSMITTER BC-1306

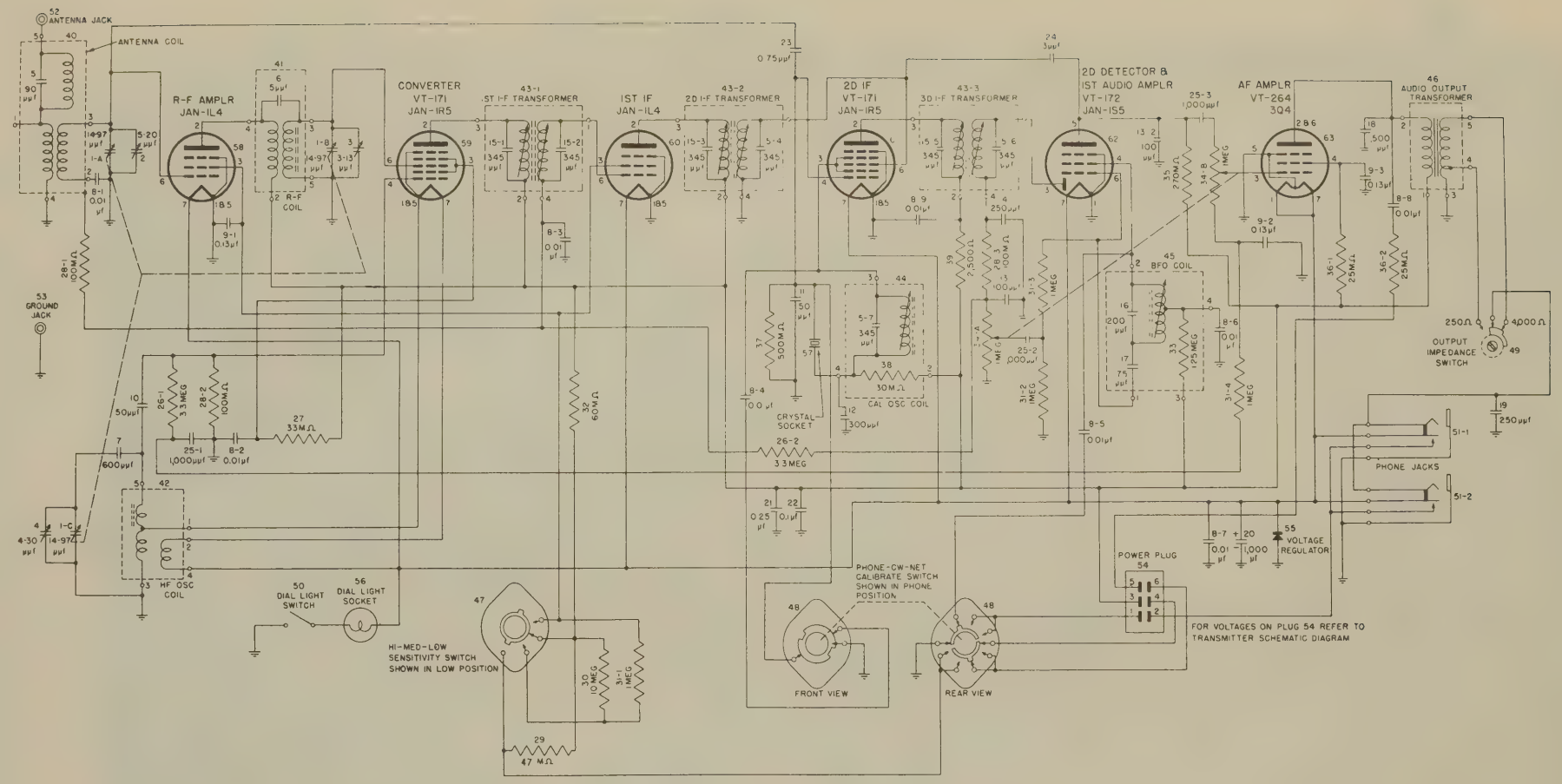

SCHEMATIC DIAGRAM RECEIVER SECTION BC-1306

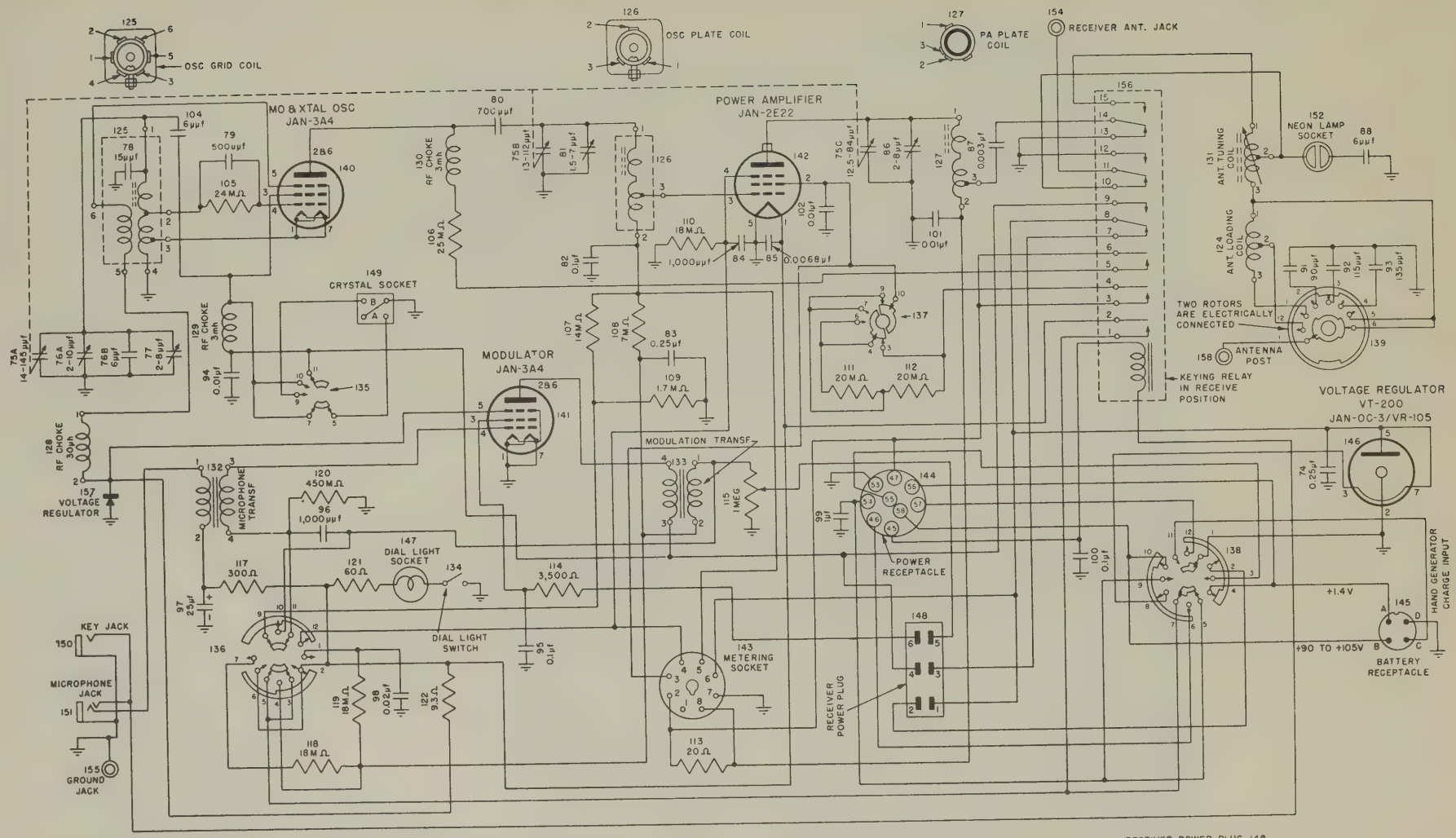

POWER RECEPTACLE 144

PIN	VOLTAGE
45	6.3 VOLTS
46	1.4 VOLTS
47	HIGH VOLTAGE (+425 TO 500 VOLTS)
54	6.3 VOLTS
56	+1.4 VOLTS
57	+105 VOLTS
58	+105 VOLTS

NOTE:

1- 135-CRYSTAL SWITCH IN POS "A"
2- 136-CW-MCW-PHONE IN POS "PHONE"
3- 137-HIGH-MED-LOW IN PCS "HIGH"
4- 138-SEND-STANDBY-OFF IN POS "STANDBY"
5- 139-ANTENNA SELECTOR SWITCH IN POS "5"
6- M Ω = 1,000 Ω
7- SWITCHES, SOCKETS, AND COILS VIEWED FROM REAR OF CHASSIS (BOTTOM)
8- ON SWITCHES 136, 138 & 139, TERMINAL NUMBERS ARE SHOWN ON LEADS TO RESPECTIVE TERMINALS

RECEIVER POWER PLUG 148

PIN	VOLTAGE
1	+105 VOLTS
2	+1.4 VOLTS
3	+105 VOLTS
4	+105 VOLTS WITH PHONE-CW-NET-CAL SWITCH IN NET OR CAL POSITION
5	SIDE TONE
6	+105 VOLTS WITH PHONE-CW-NET-CAL SWITCH IN PHONE OR CW POSITION AND SEND-STANDBY-OFF SWITCH IN SEND POSITION

SCHEMATIC DIAGRAM TRANSMITTER SECTION BC-1306

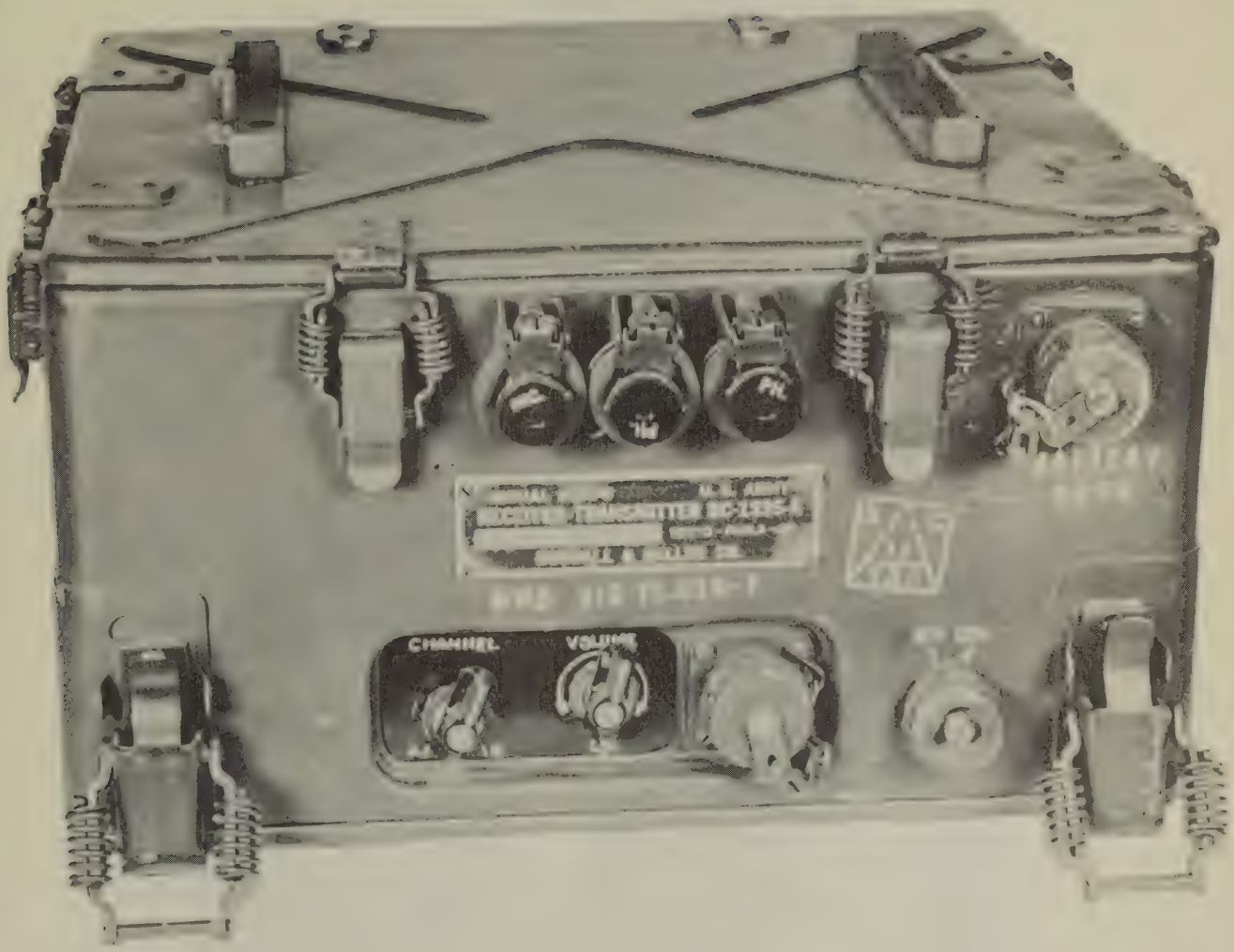

RADIO RECEIVER AND TRANSMITTER BC-1335

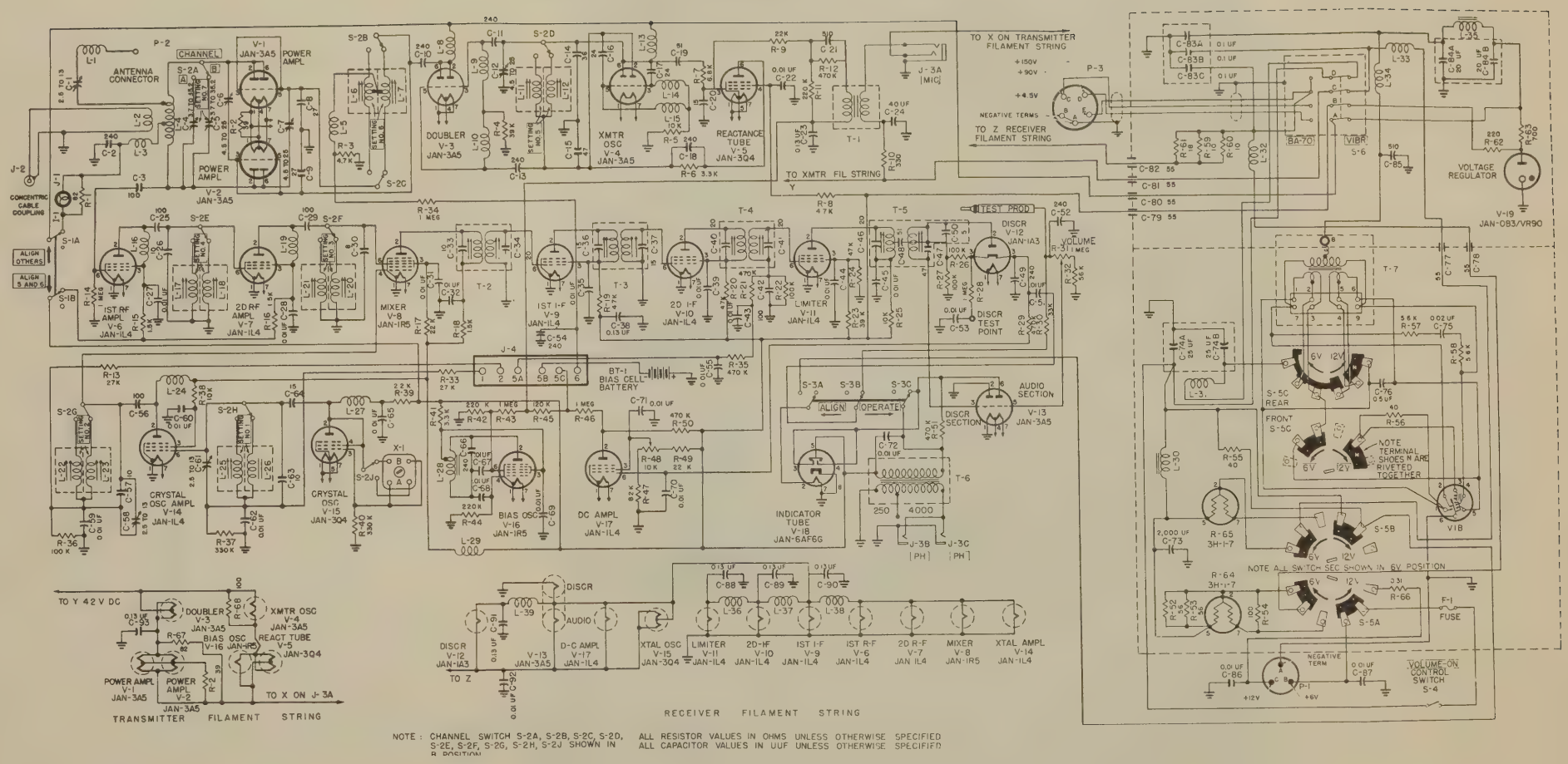

SCHEMATIC DIAGRAM RADIO RECEIVER AND TRANSMITTER BC-1335

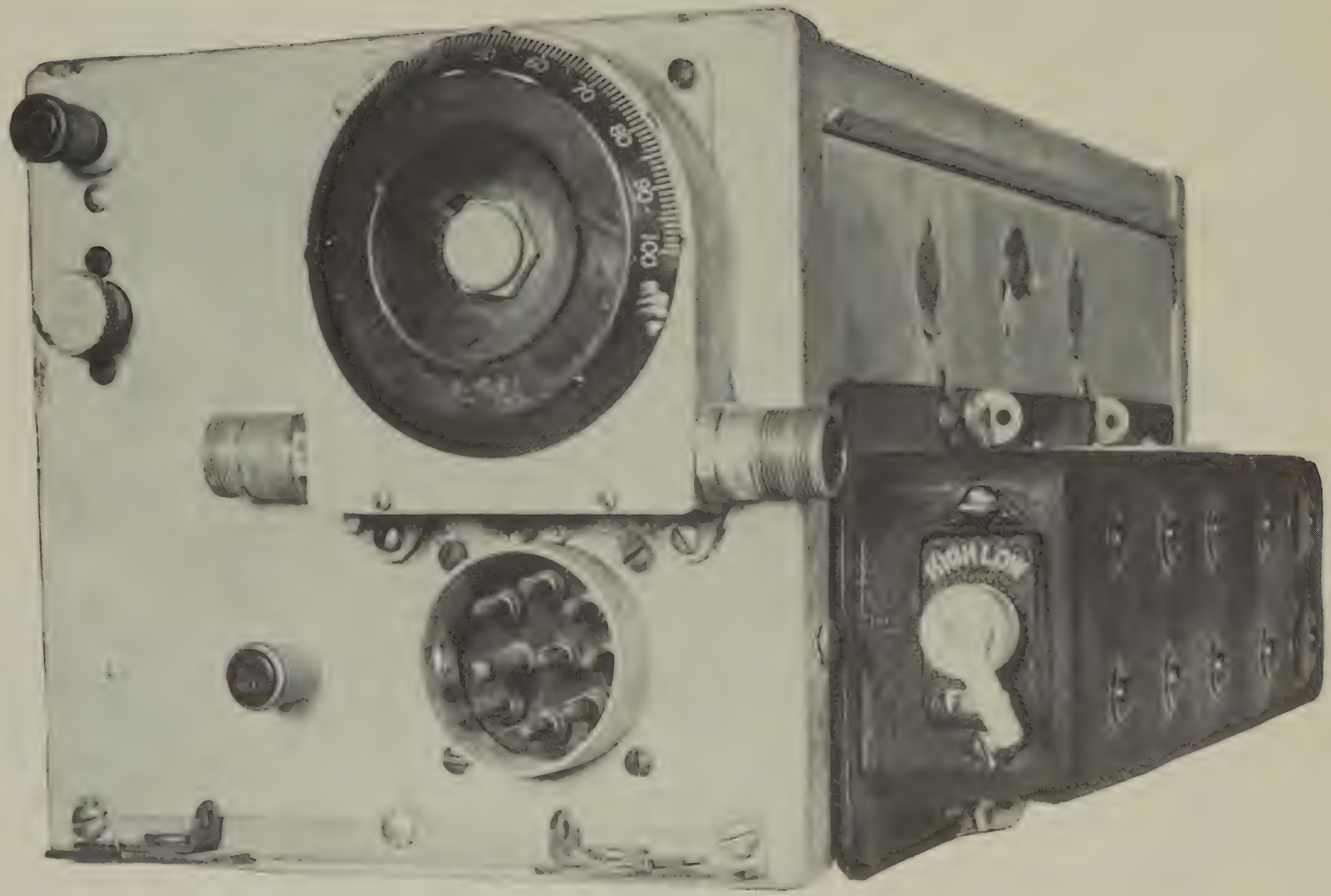

RADIO RECEIVER BC-AR-231 AND GF-11

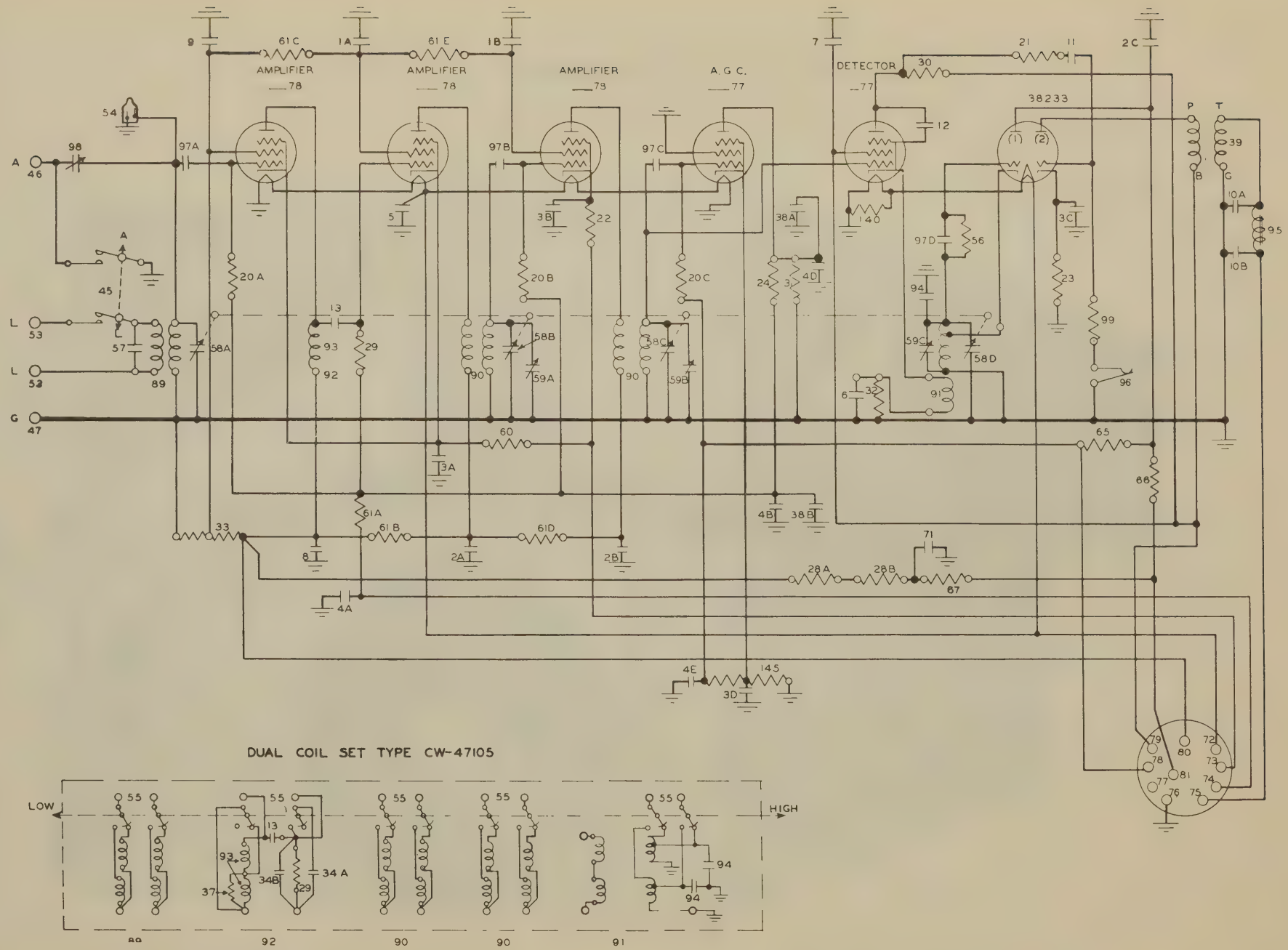

SCHEMATIC DIAGRAM RADIO RECEIVER GF-11

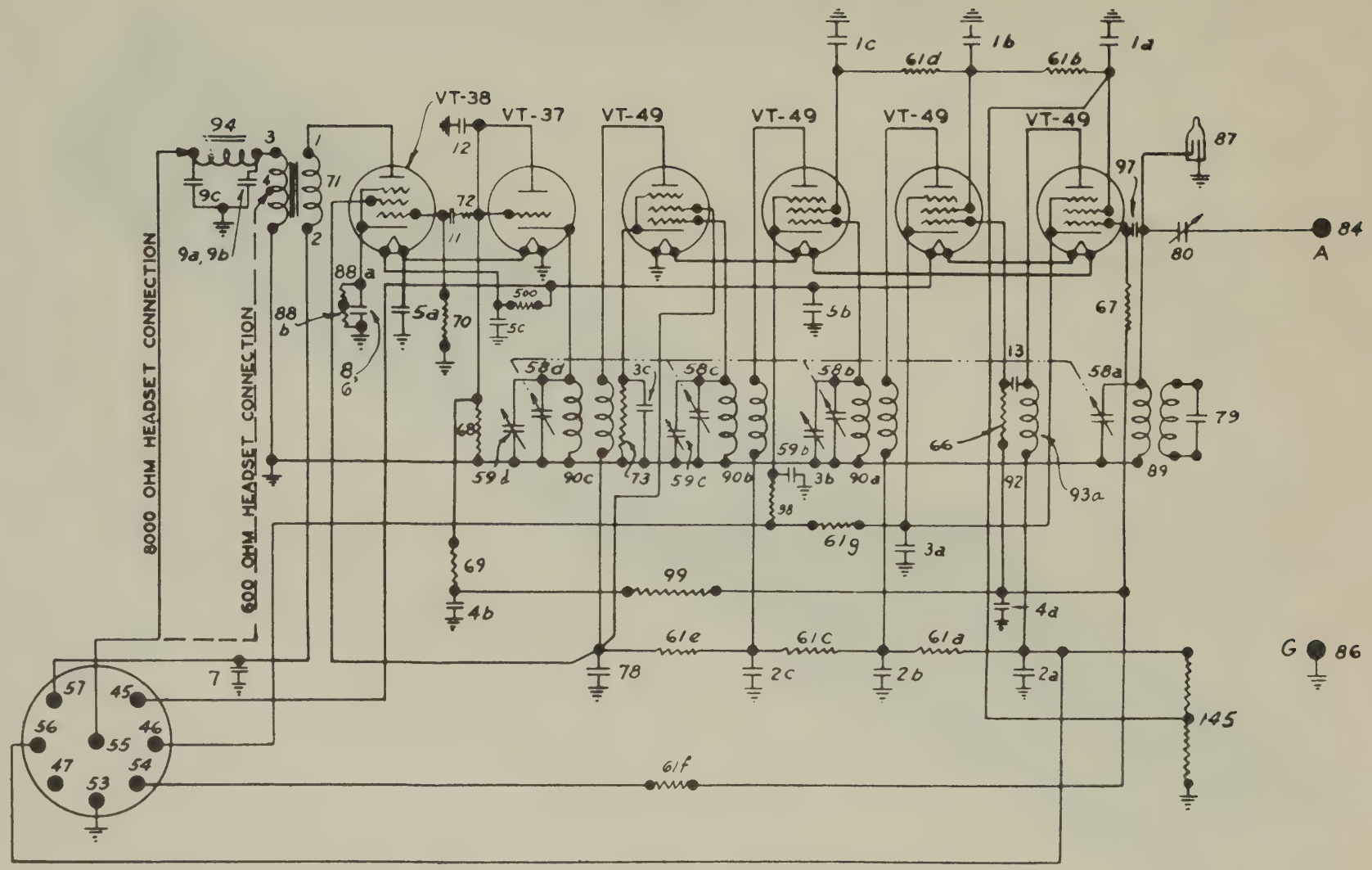

SCHEMATIC DIAGRAM RADIO RECEIVER BC-AR-231

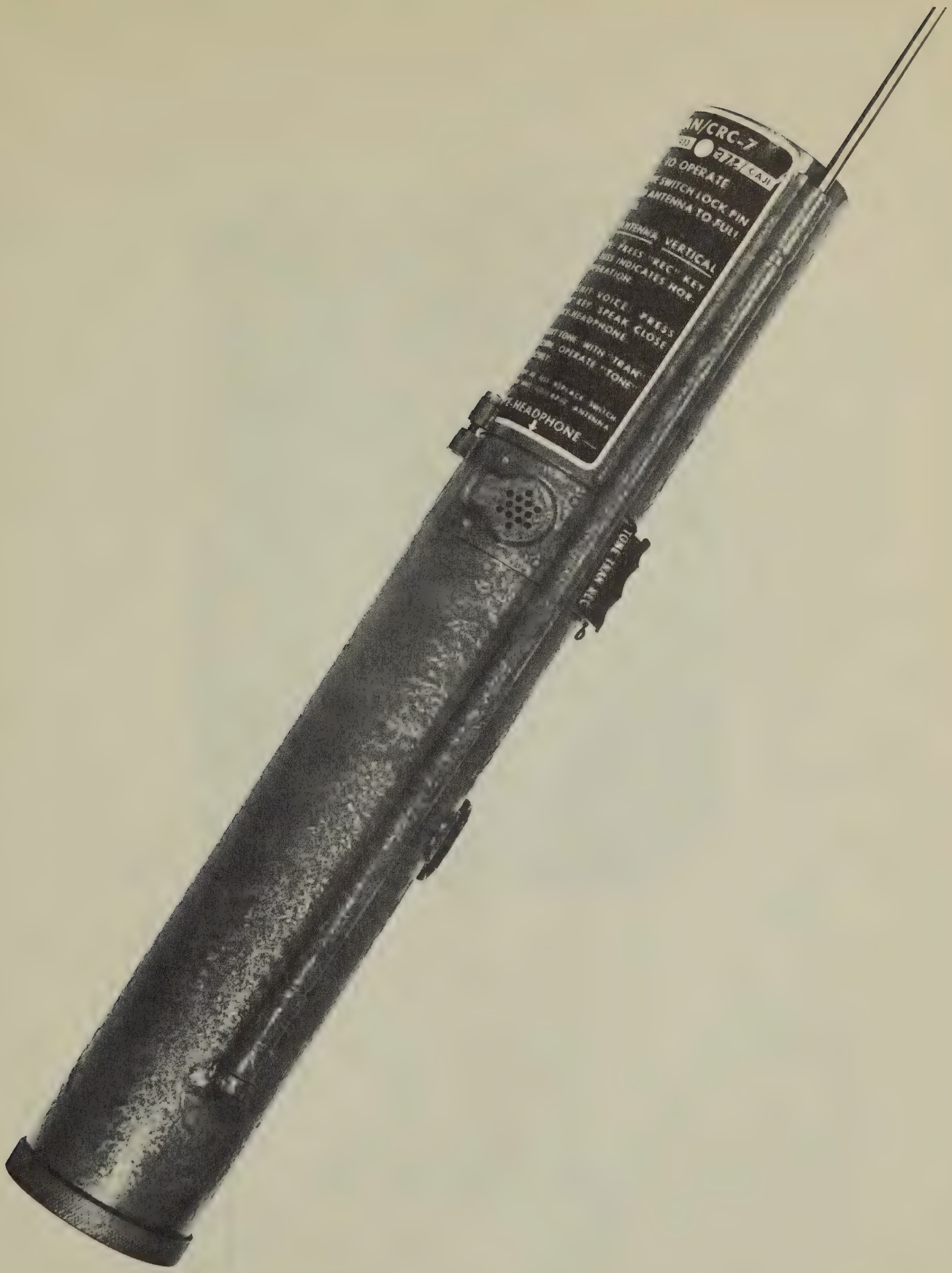

RADIO RECEIVER AND TRANSMITTER CRC-7

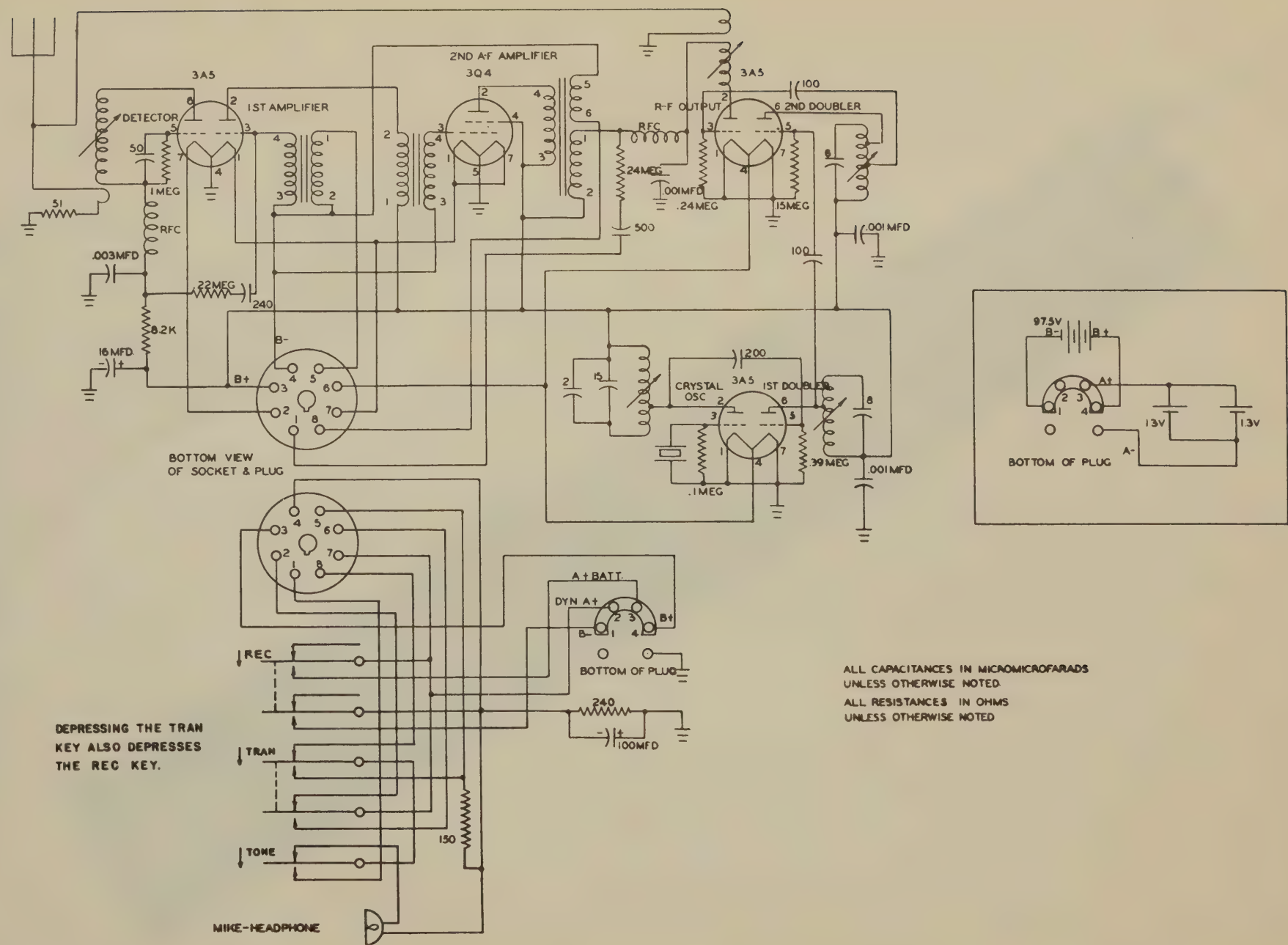

SCHEMATIC DIAGRAM RADIO RECEIVER AND TRANSMITTER CRC-7

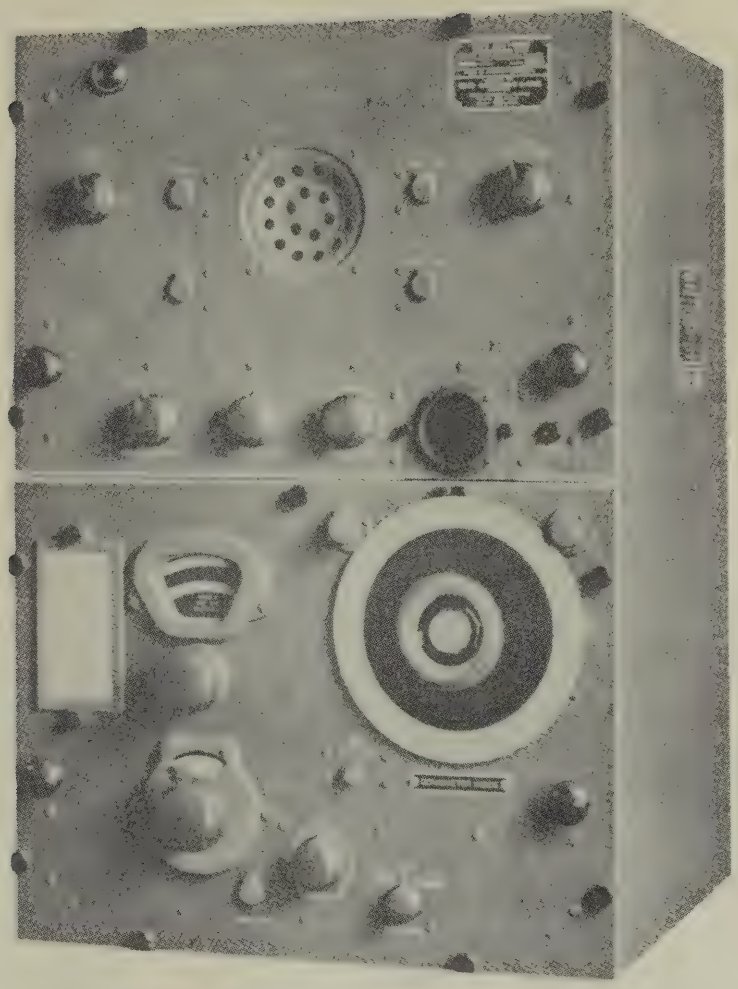

RADIO RECEIVER DAK-3

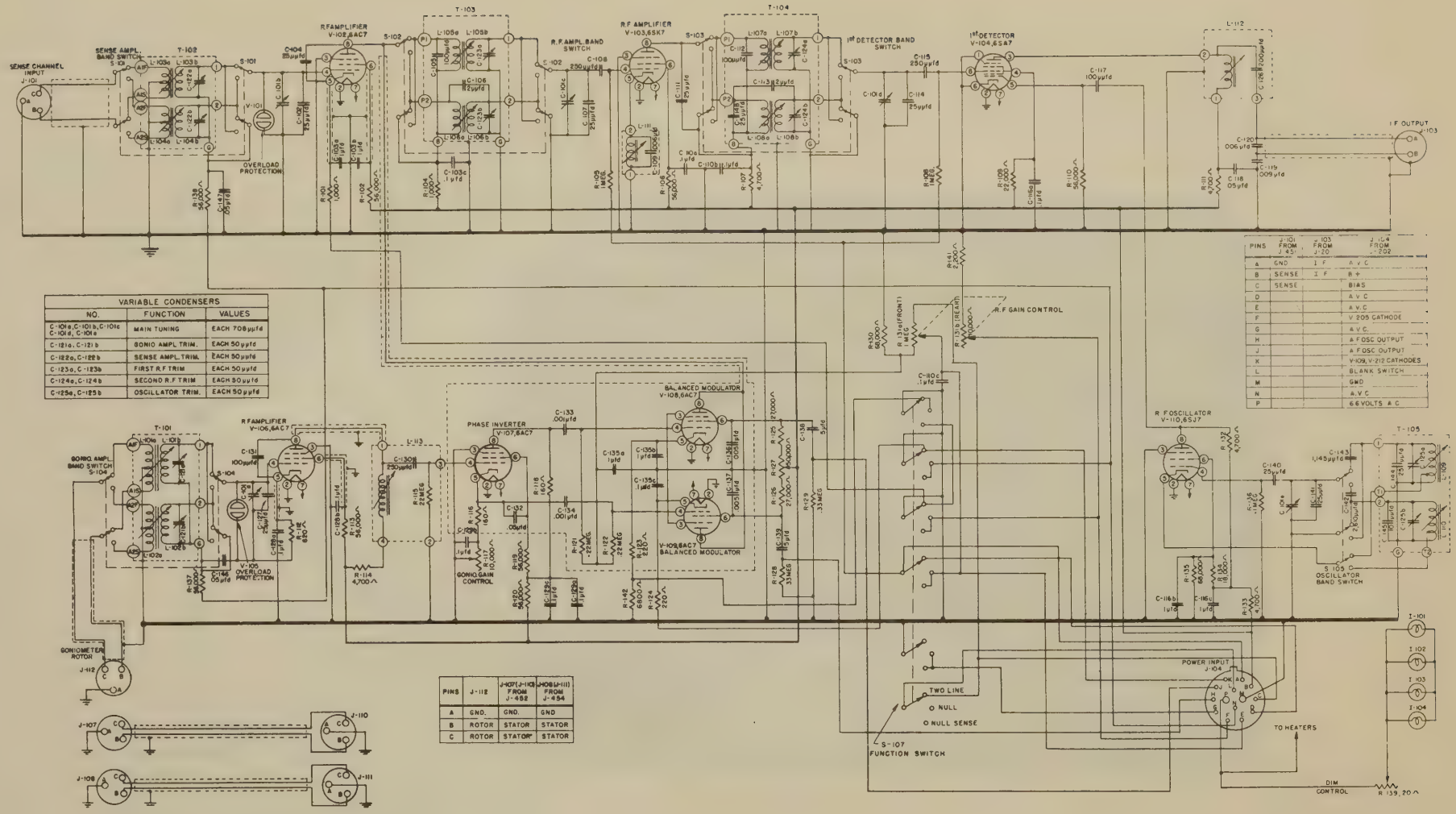

VARIABLE CONDENSERS		
NO.	FUNCTION	VALUES
C-101a, C-101b, C-101c C-101d, C-101e	MAIN TUNING	EACH 708 μμfd
C-121a, C-121b	GONIO AMPL. TRIM.	EACH 50 μμfd
C-122a, C-122b	SENSE AMPL. TRIM.	EACH 50 μμfd
C-123a, C-123b	FIRST R.F TRIM	EACH 50 μμfd
C-124a, C-124b	SECOND R.F TRIM	EACH 50 μμfd
C-125a, C-125b	OSCILLATOR TRIM.	EACH 50 μμfd

PINS	J-101 FROM J-451	J-103 FROM J-20	J-104 FROM J-202
A	GND	I F	A V C
B	SENSE	I F	B +
C	SENSE		BIAS
D			A V C
E			A V C
F			V 205 CATHODE
G			A V C.
H			A FOSC OUTPUT
J			A FOSC OUTPUT
K			V-109, V-212 CATHODES
L			BLANK SWITCH
M			GND
N			A.V.C
P			6.6 VOLTS A C

PINS	J-112	J-107 (J-108) FROM J-452	J-108 (J-111) FROM J-454
A	GND.	GND.	GND
B	ROTOR	STATOR	STATOR
C	ROTOR	STATOR	STATOR

SCHEMATIC DIAGRAM DAK-3 MODULATOR SECTION

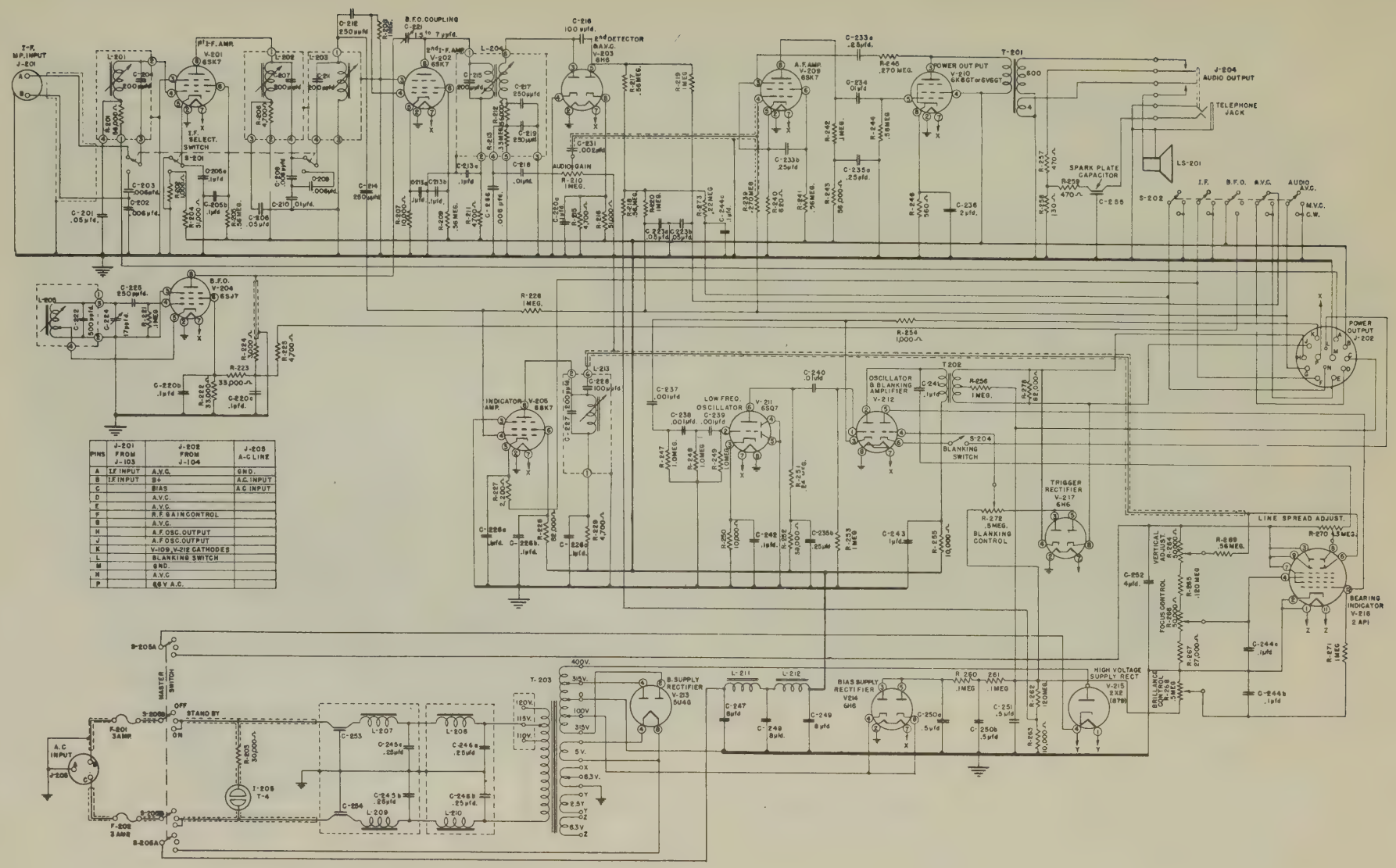

PINS	J-201 FROM J-103	J-202 FROM J-104	J-203 A-C LINE
A	I.F. INPUT	A.V.C.	GND.
B	I.F. INPUT	B+	A.C. INPUT
C		BIAS	A.C. INPUT
D		A.V.C.	
E		A.V.C.	
F		R.F. GAIN CONTROL	
G		A.V.C.	
H		A.F. OSC. OUTPUT	
J		A.F. OSC. OUTPUT	
K		V-109, V-212 CATHODES	
L		BLANKING SWITCH	
M		GND.	
N		A.V.C.	
P		6.6 V A.C.	

SCHEMATIC DIAGRAM DAK-3 POWER INDICATOR SECTION

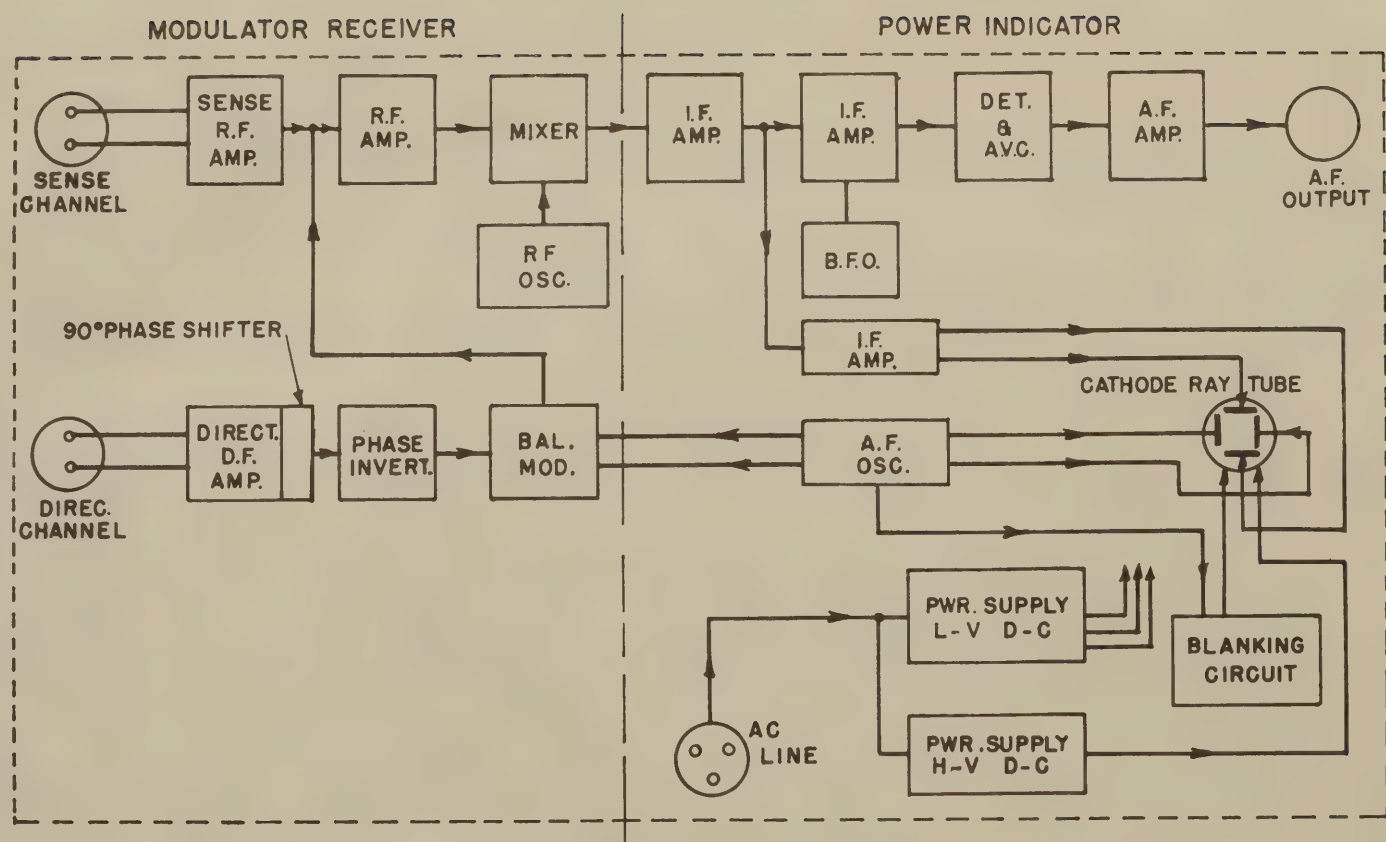

BLOCK DIAGRAM DAK-3 RADIO RECEIVER

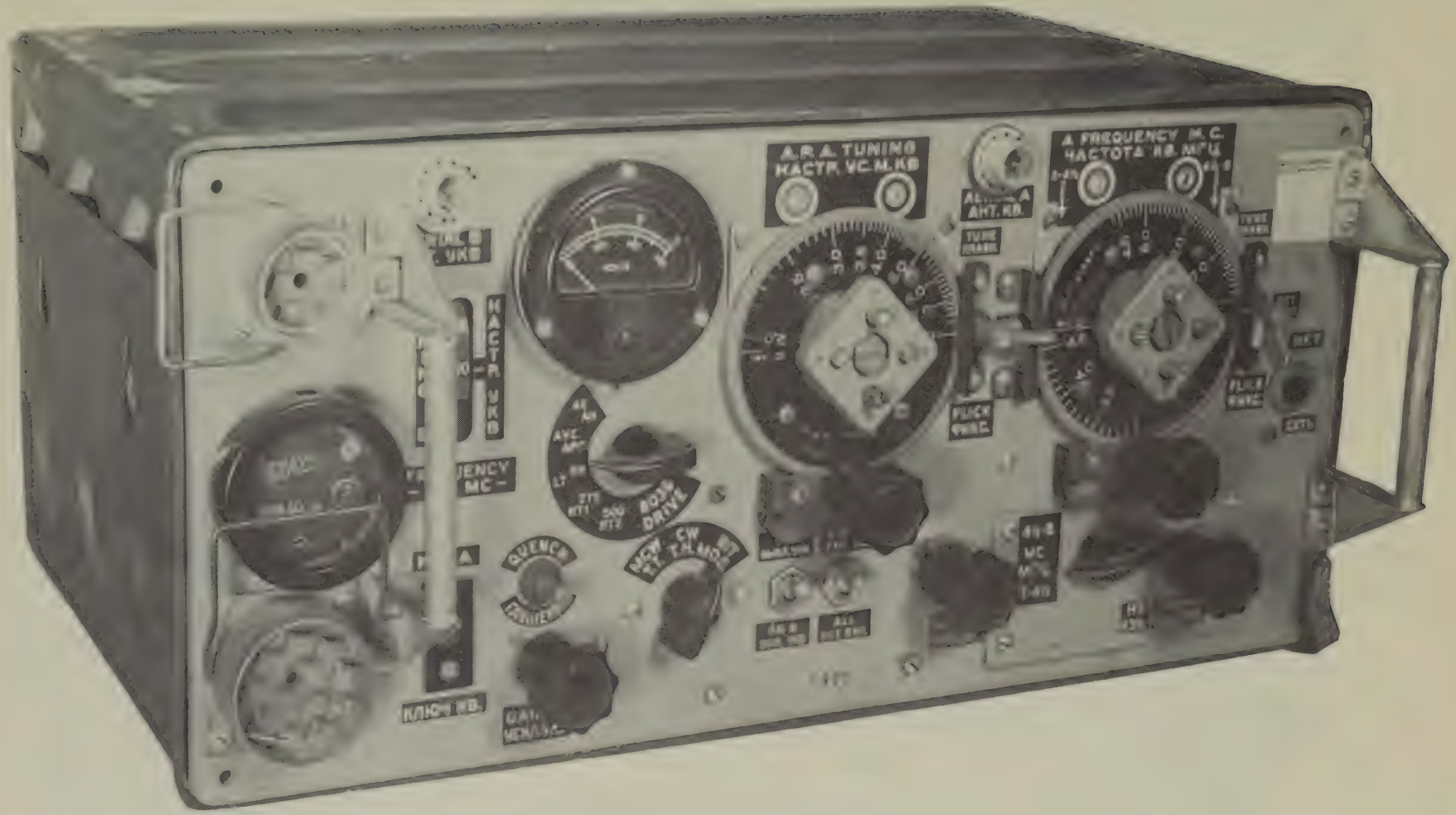

RADIO RECEIVER AND TRANSMITTER MARK II

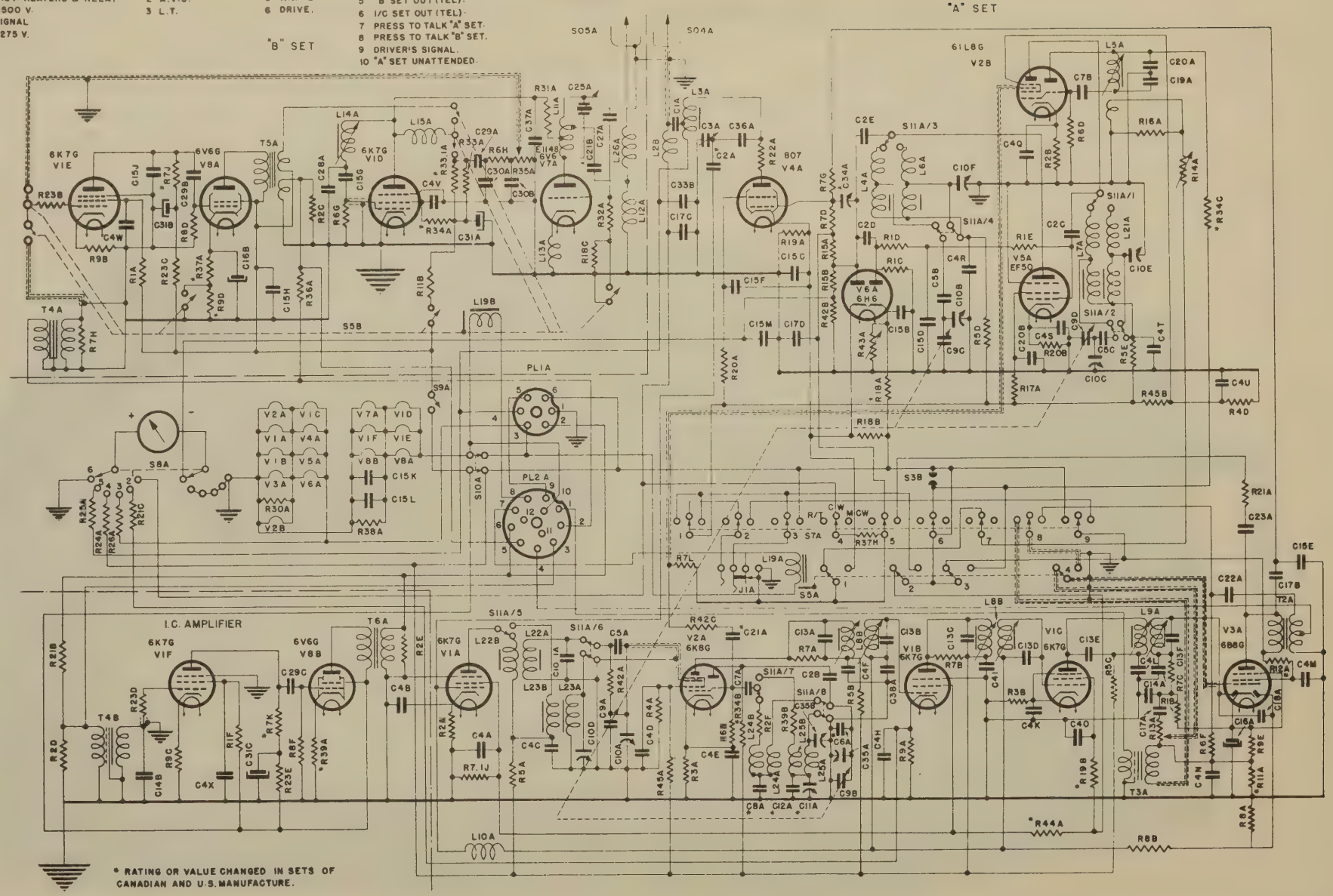

SCHEMATIC DIAGRAM RADIO RECEIVER AND TRANSMITTER MARK II

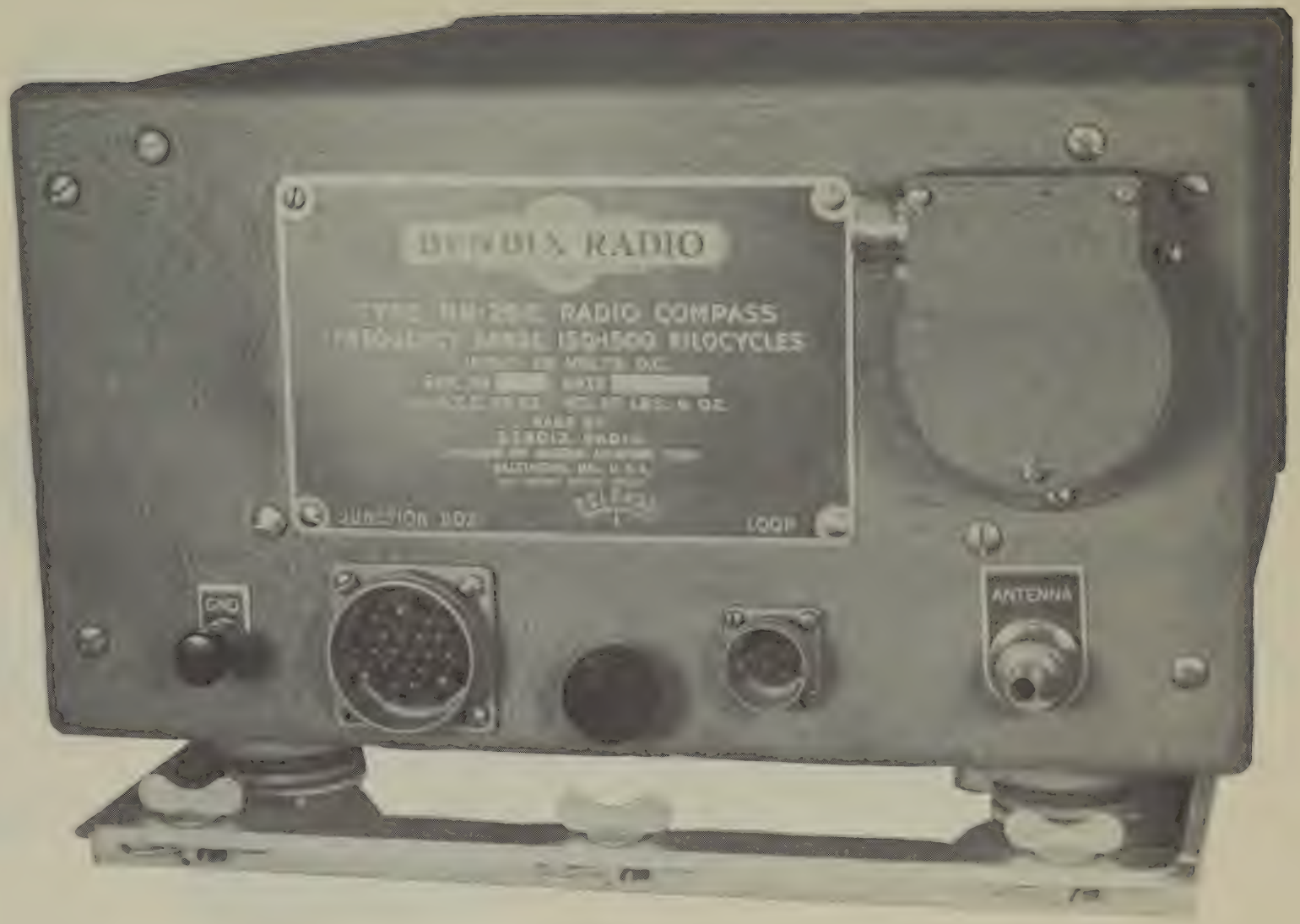

RADIO RECEIVER MN-26

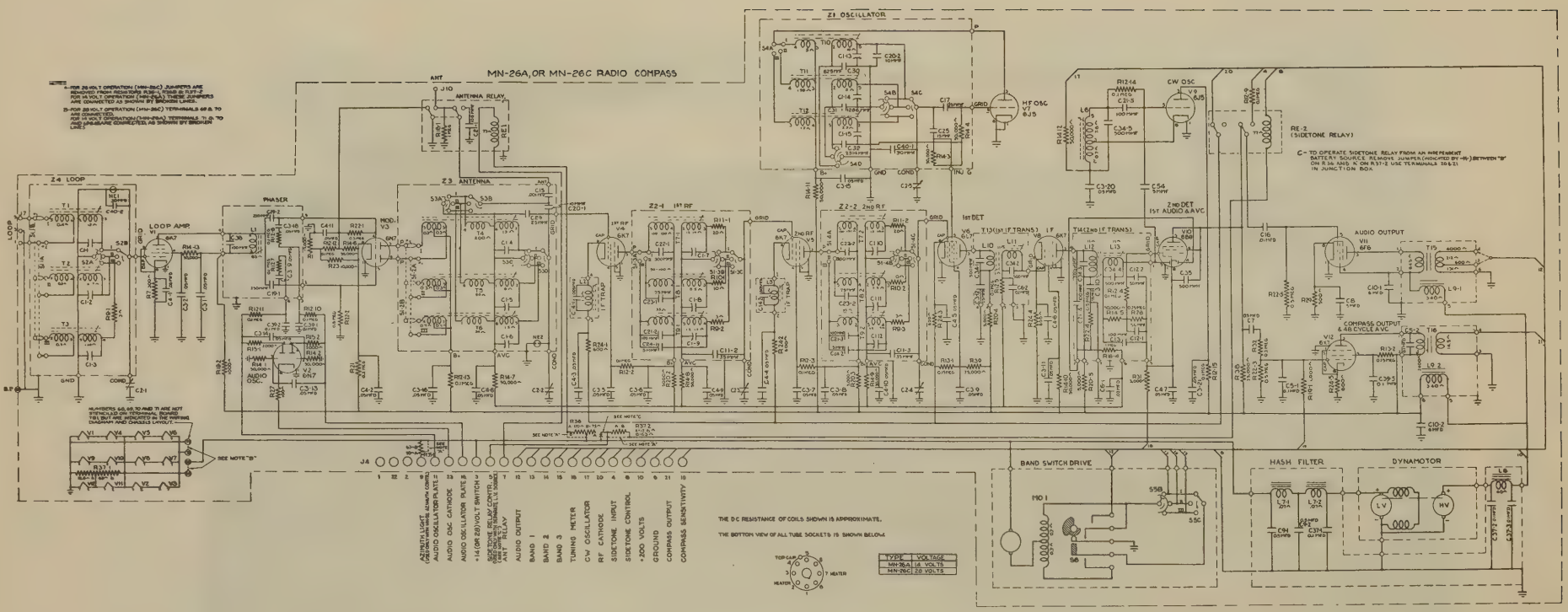

SCHEMATIC DIAGRAM RADIO RECEIVER MN-26

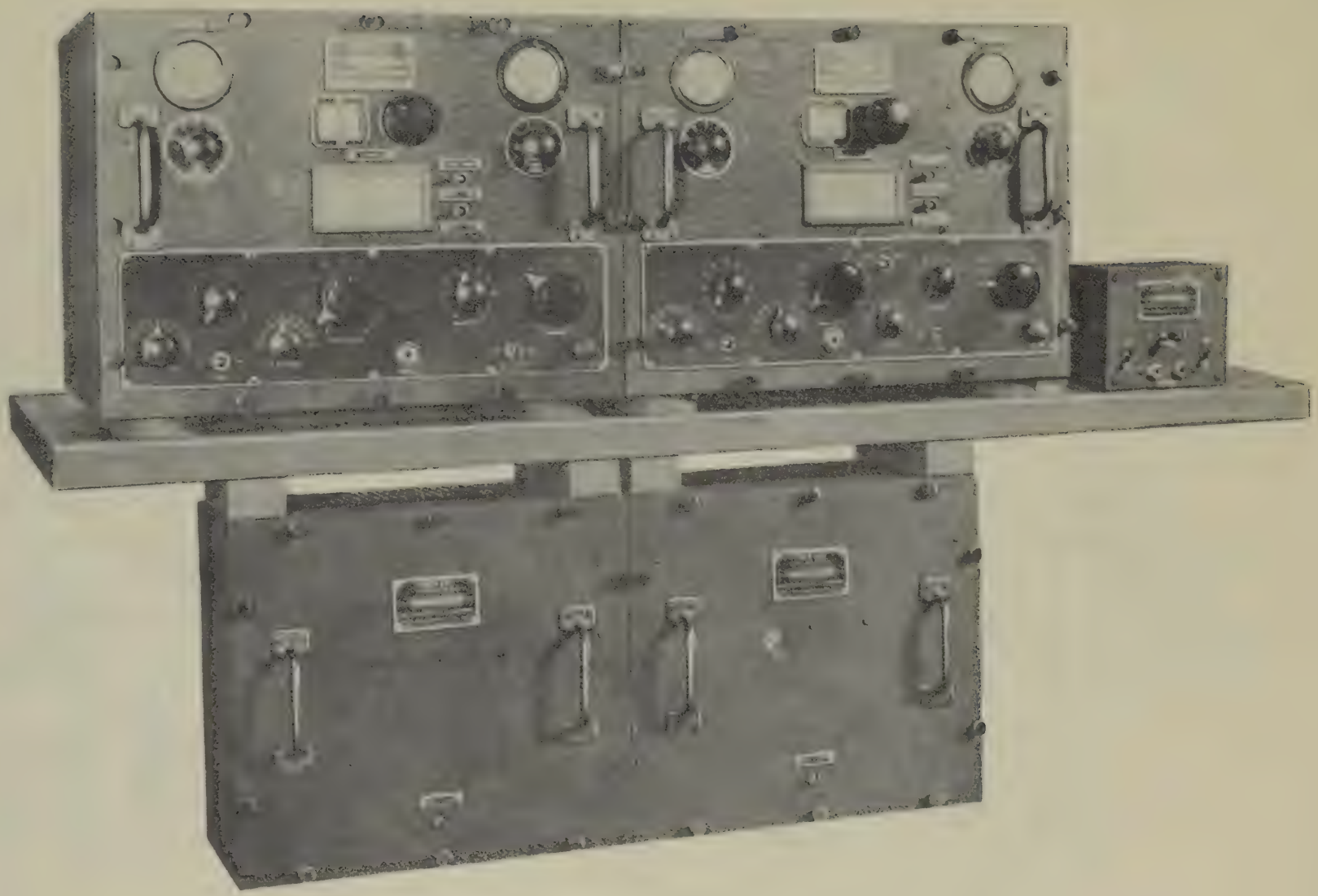

RADIO RECEIVER RAK-5 and RAL-5

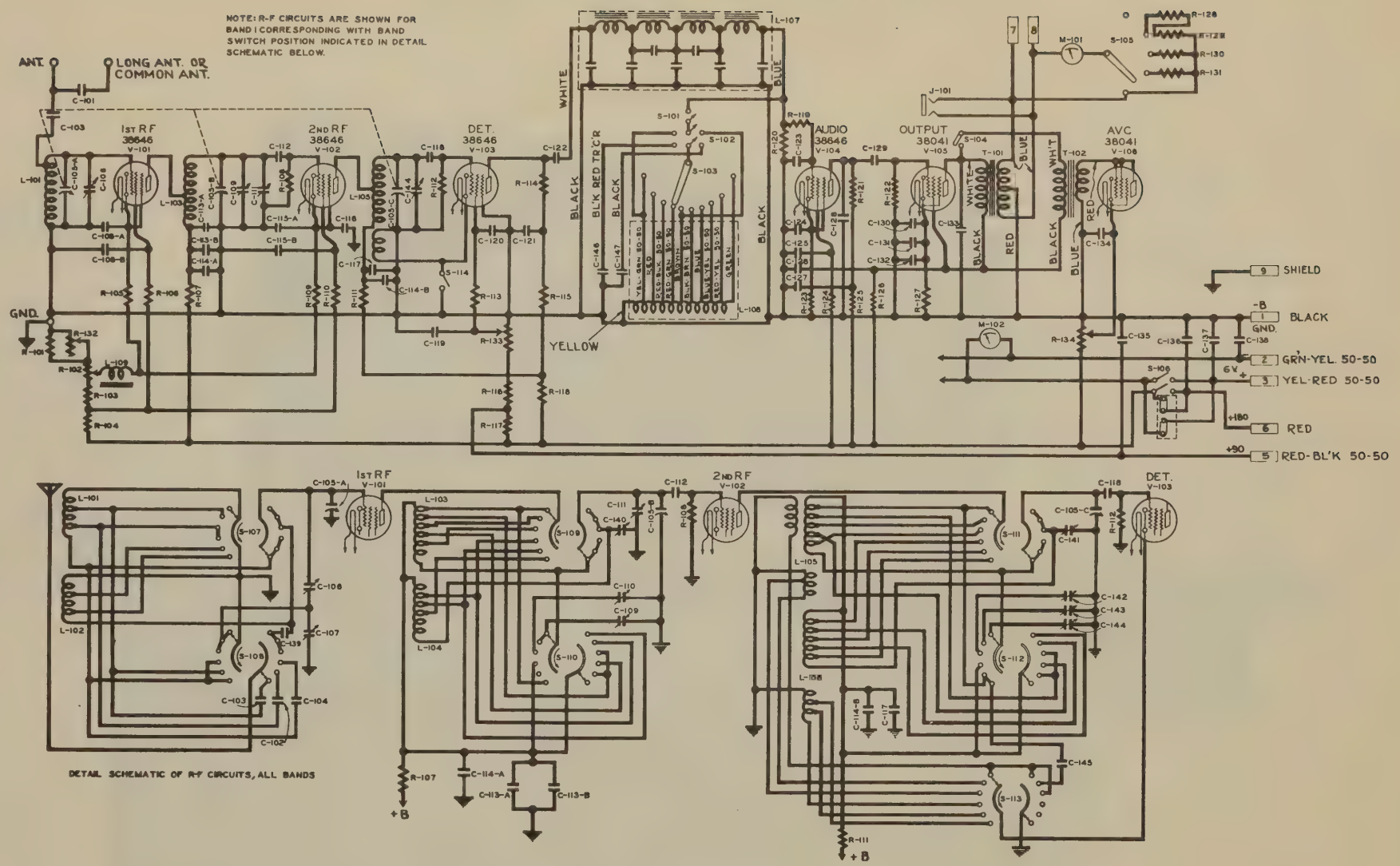

SCHEMATIC DIAGRAM RADIO RECEIVER RAK-5

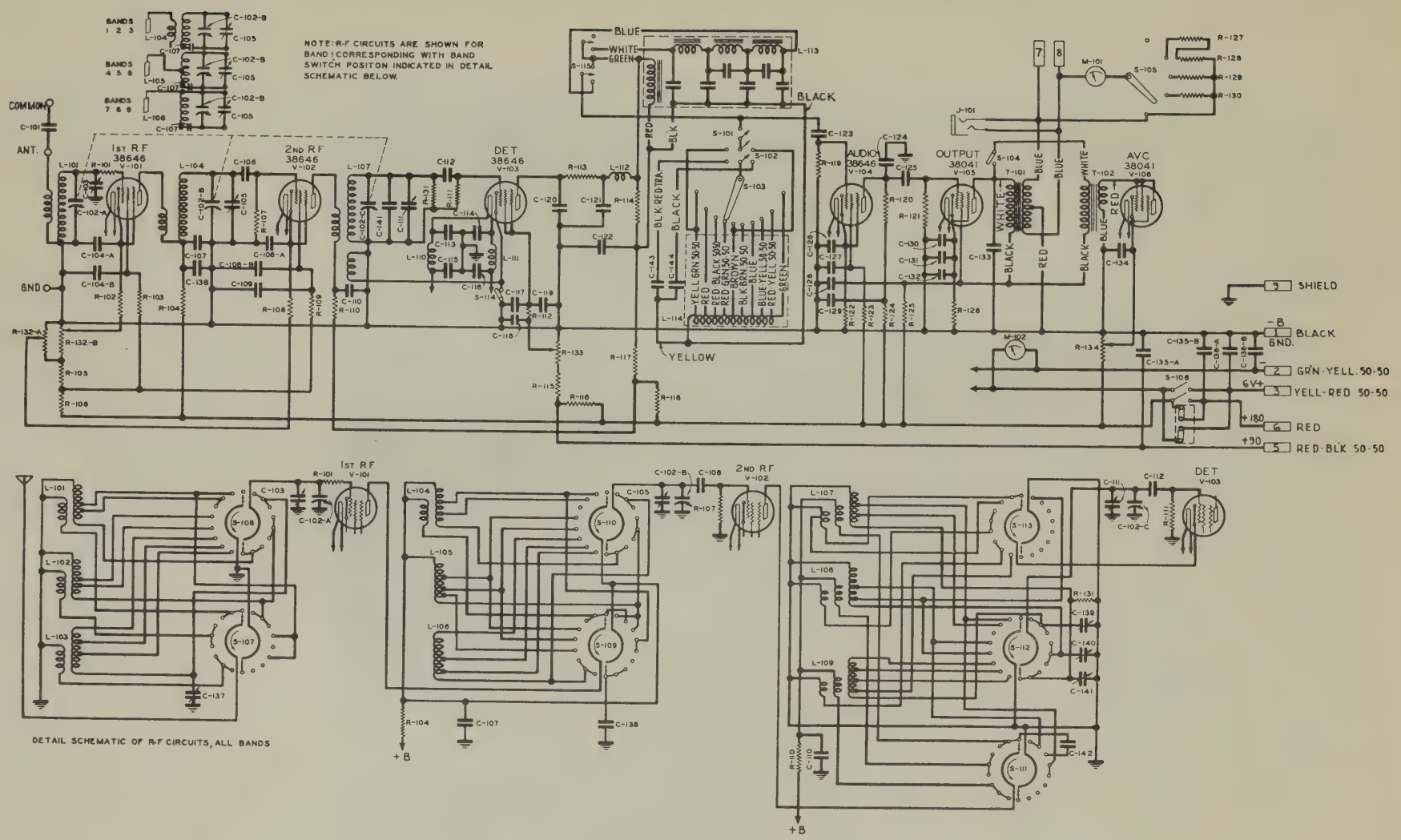

SCHEMATIC DIAGRAM RADIO RECEIVER RAL-5

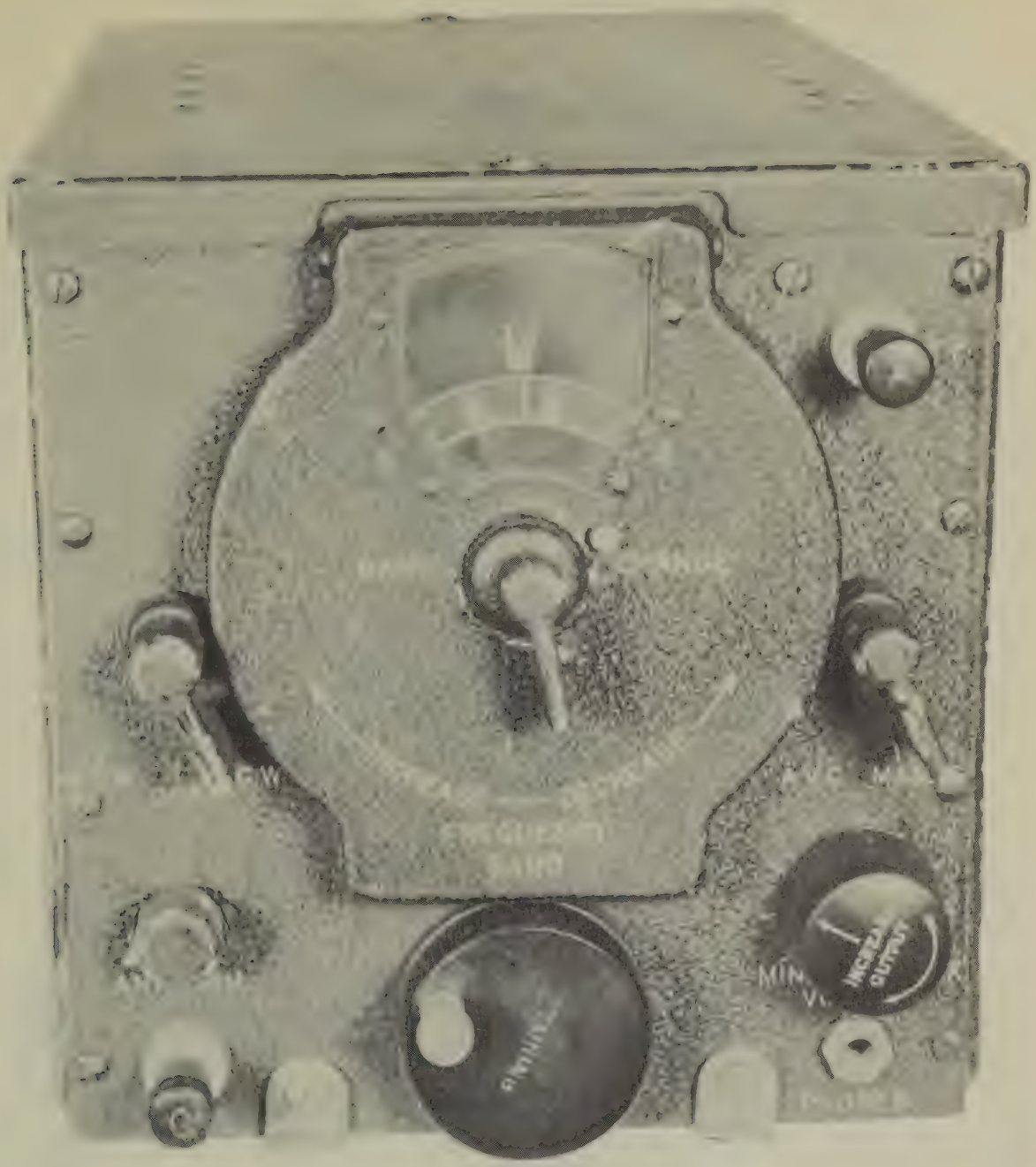

RADIO RECEIVER RAX-1

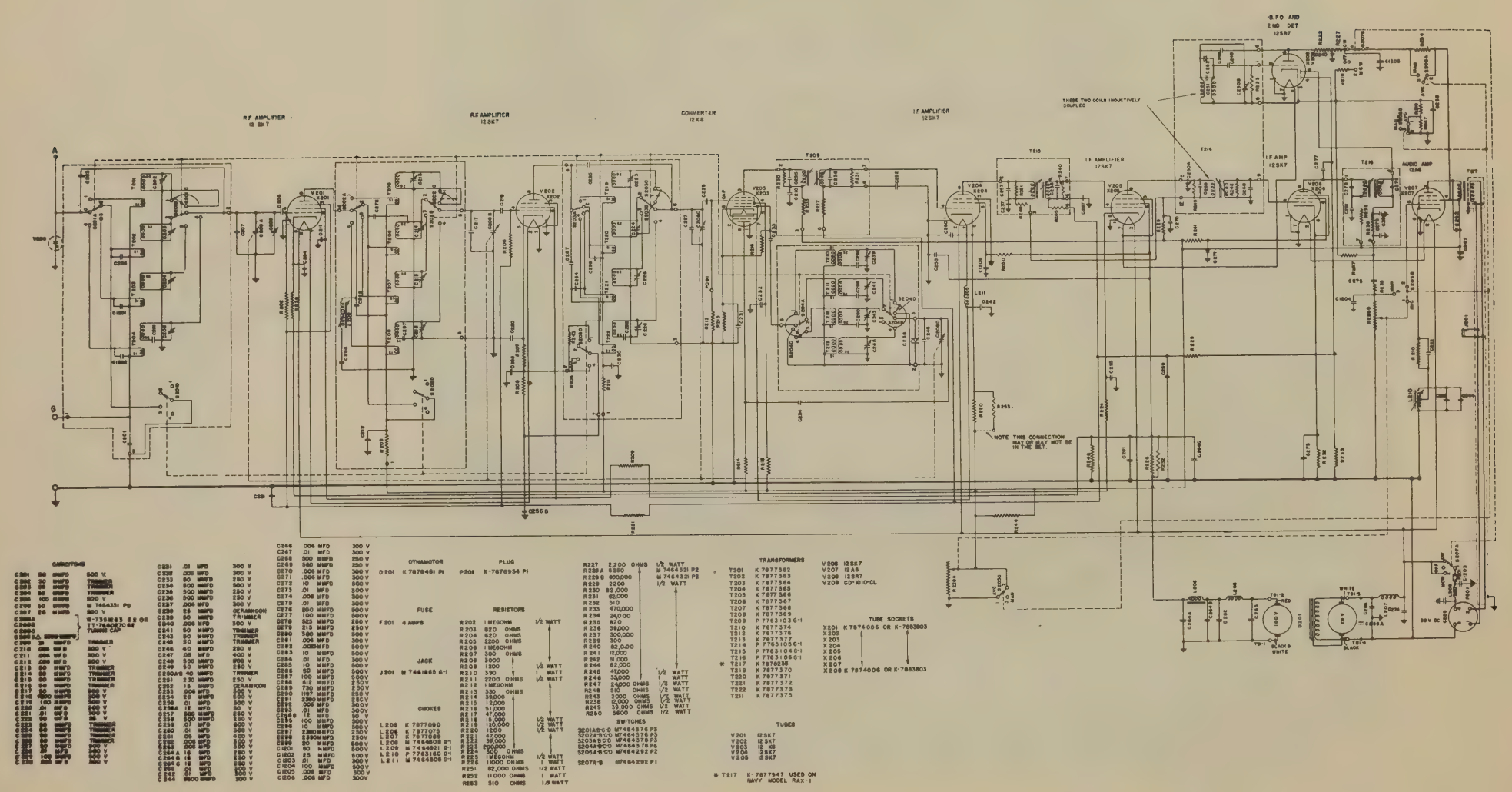

SCHEMATIC DIAGRAM RADIO RECEIVER RAX-1

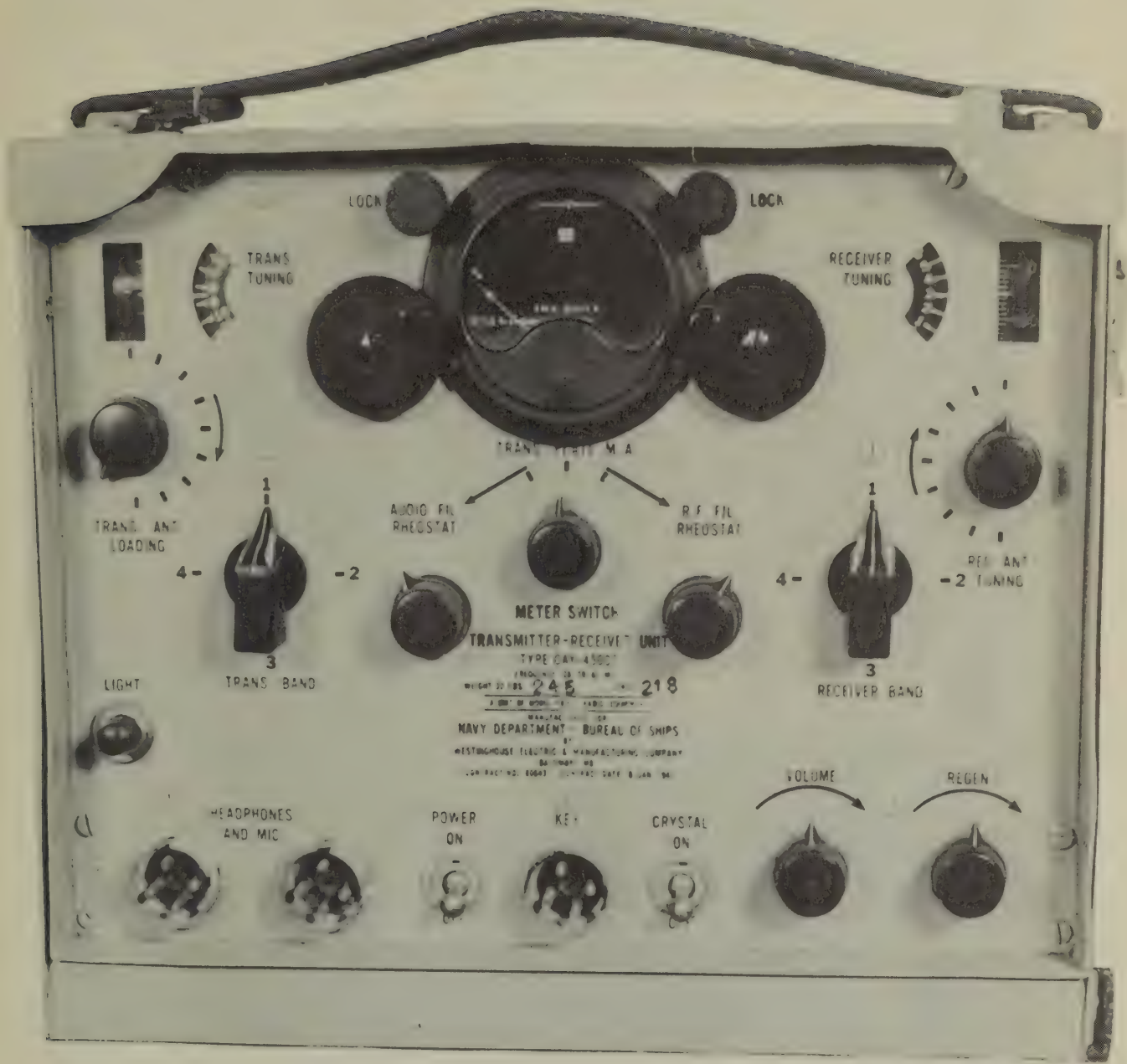

RADIO RECEIVER AND TRANSMITTER TBY

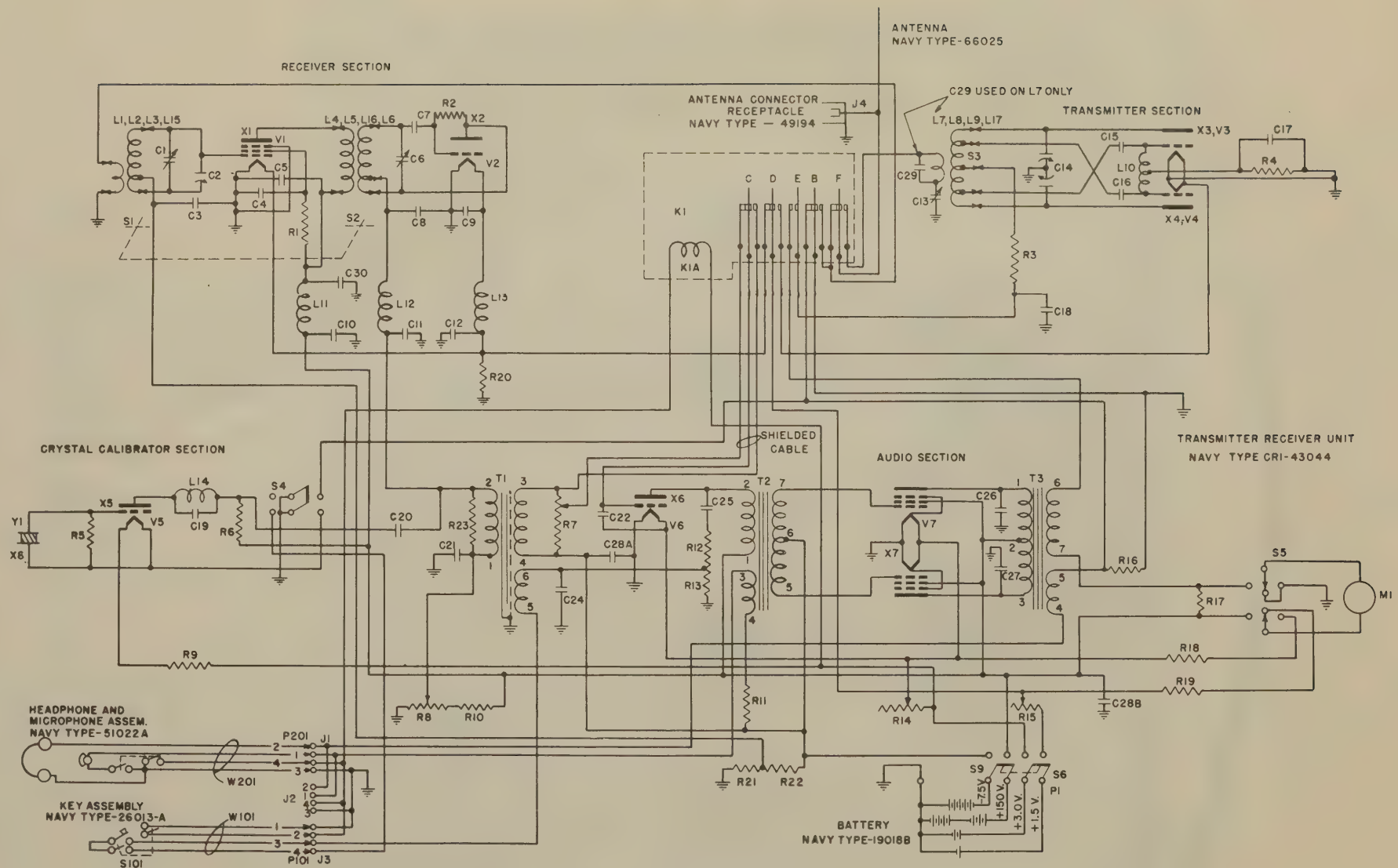

SCHEMATIC DIAGRAM RADIO RECEIVER AND TRANSMITTER TBY

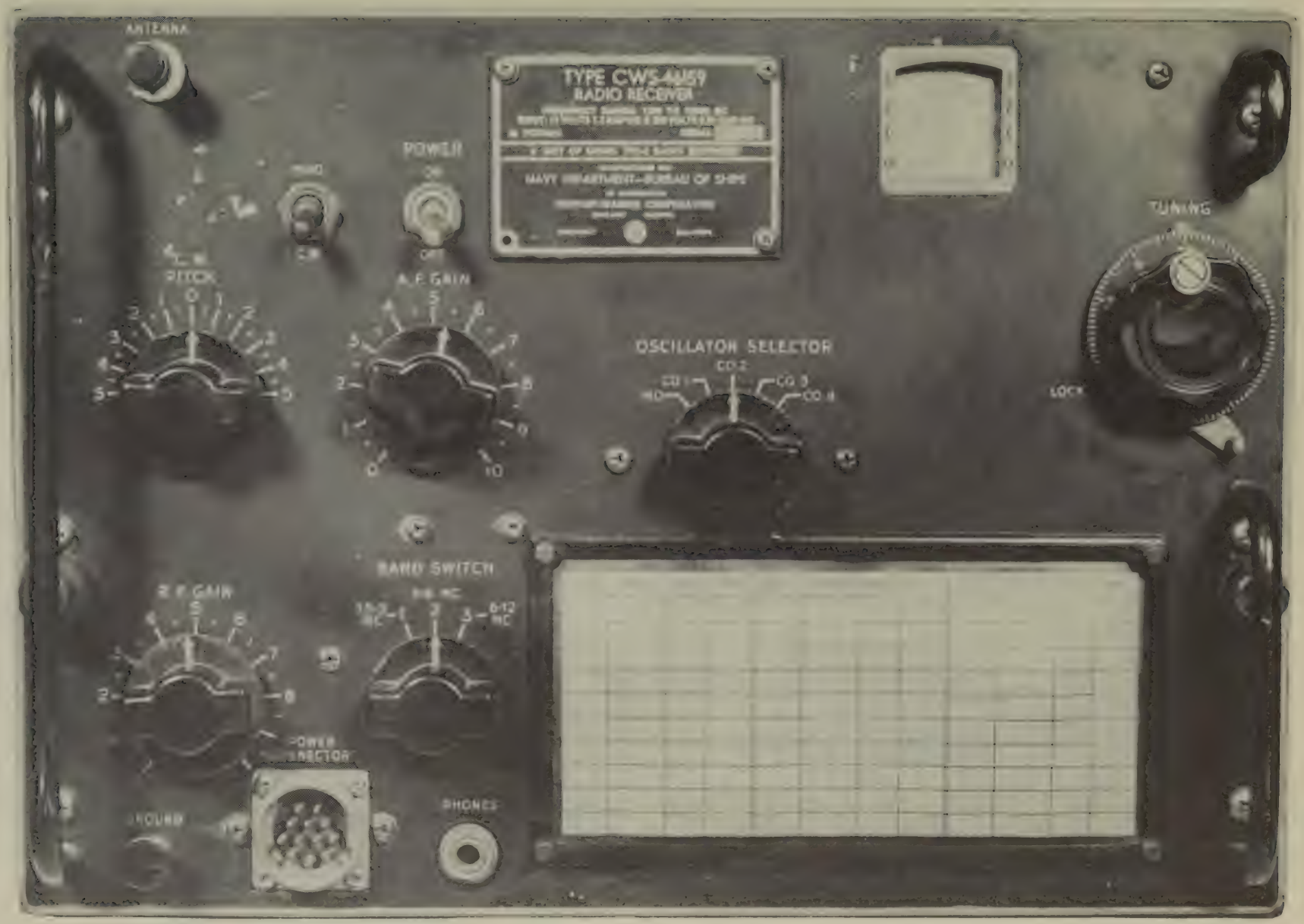

RADIO RECEIVER TCS

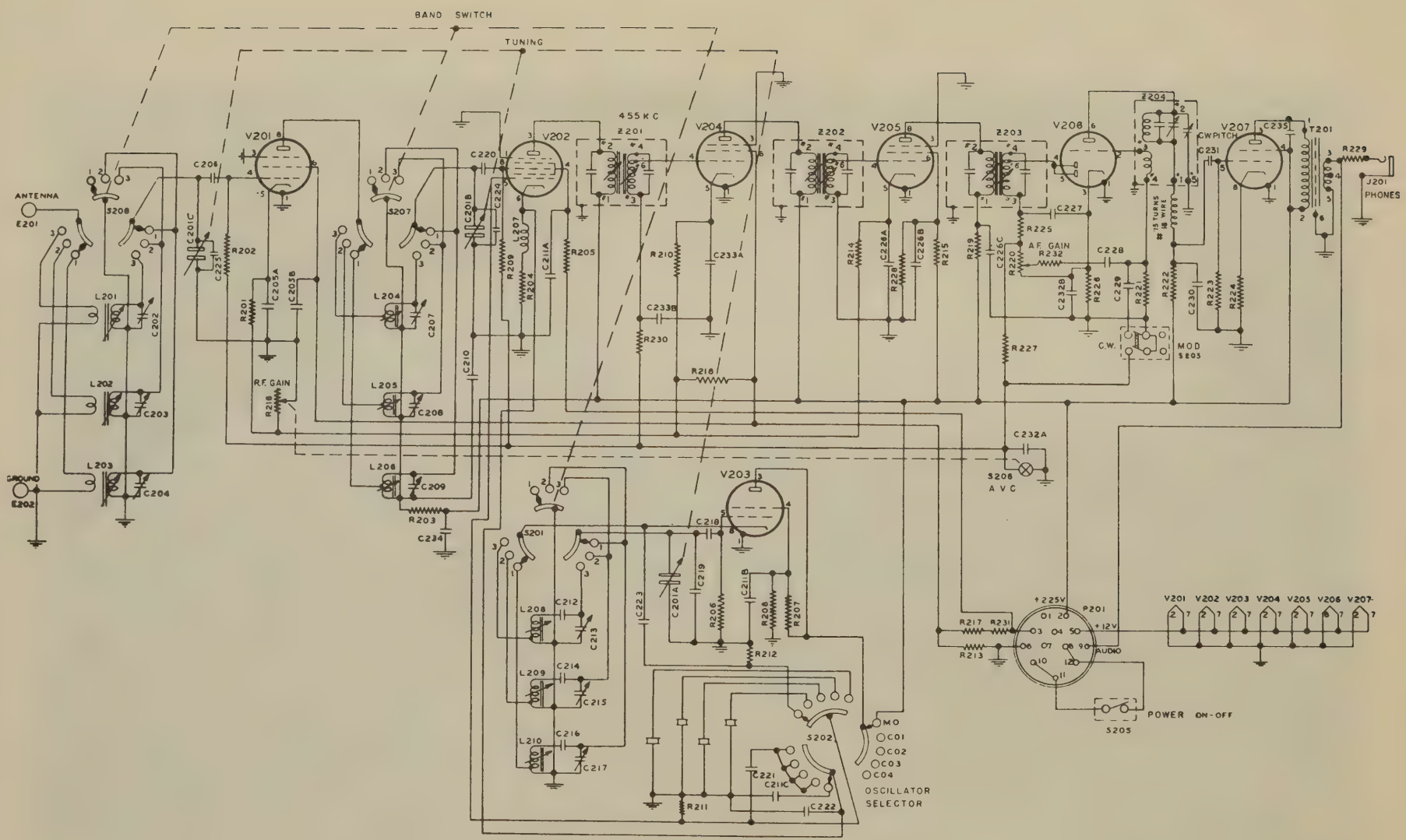

SCHEMATIC DIAGRAM RADIO RECEIVER TCS

RESISTOR COLOR CODES

RMA COLOR CODE FOR FIXED COMPOSITION RESISTORS*

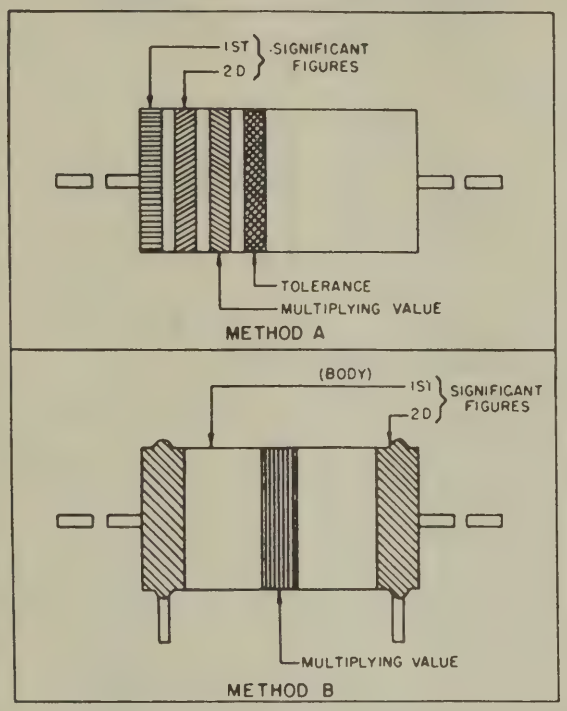

A

JAN COLOR CODE FOR FIXED COMPOSITION RESISTORS†

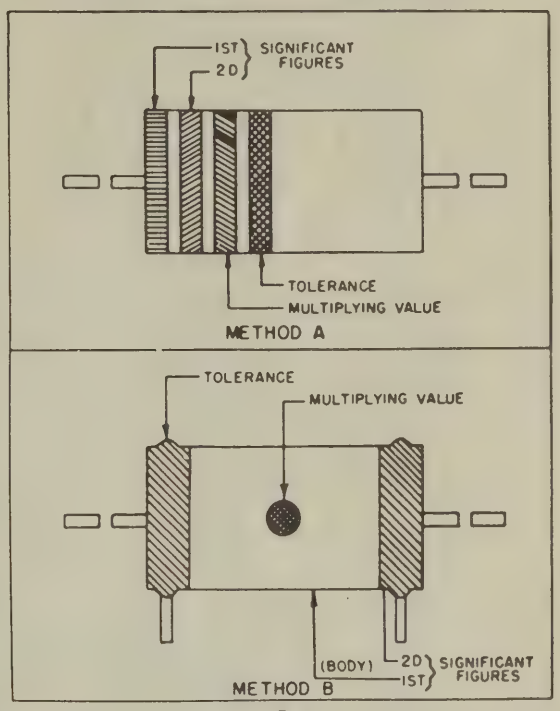

B

COLOR	SIGNIFICANT FIGURE	MULTIPLYING VALUE	TOLERANCE (%)
BLACK	0	1	± –
BROWN	1	10	± 1
RED	2	100	± 2
ORANGE	3	1,000	± 3
YELLOW	4	10,000	± 4
GREEN	5	100,000	± 5
BLUE	6	1,000,000	± 6
VIOLET	7	10,000,000	± 7
GRAY	8	100,000,000	± 8
WHITE	9	1,000,000,000	± 9
GOLD	–	0 1	± 5
SILVER	–	0 01	± 10
NO COLOR	–	–	± 20

NOTES

* INSULATED FIXED COMPOSITION RESISTORS WITH AXIAL LEADS ARE DESIGNATED BY A NATURAL TAN BACKGROUND COLOR NON-INSULATED FIXED COMPOSITION RESISTORS WITH AXIAL LEADS ARE DESIGNATED BY A BLACK BACKGROUND.

† RESISTORS WITH AXIAL LEADS ARE INSULATED. RESISTORS WITH RADIAL LEADS ARE NON-INSULATED

RMA RADIO MANUFACTURERS ASSOCIATION

JAN JOINT ARMY-NAVY

THESE COLOR CODES GIVE ALL RESISTANCE VALUES IN OHMS

CAPACITOR COLOR CODES

RMA 3-4-5-& 6-DOT COLOR CODES FOR MICA-DIELECTRIC CAPACITORS

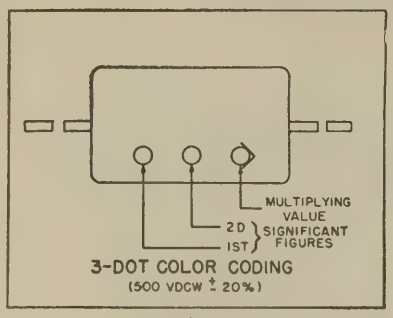

A

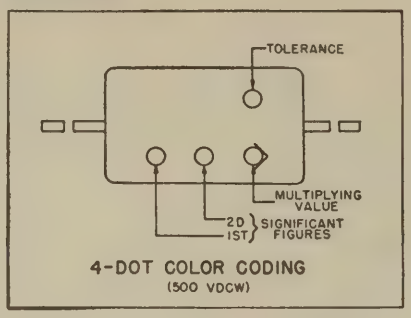

B

JAN 6-DOT COLOR CODES FOR:

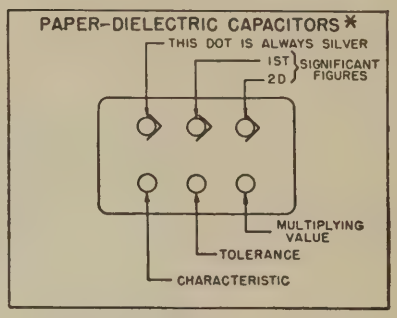

F

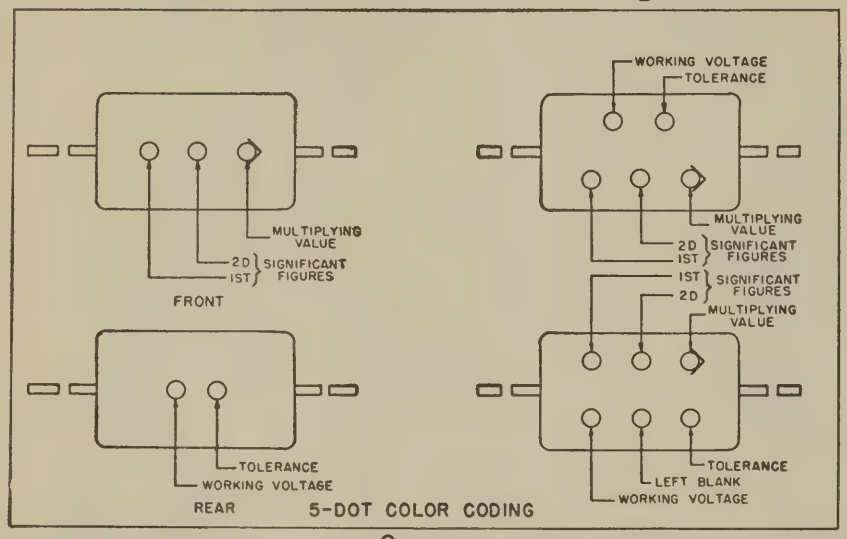

C

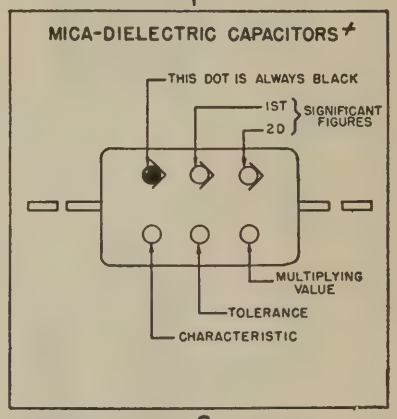

G

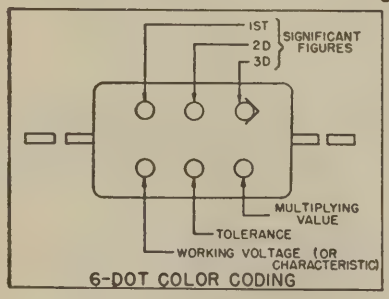

D

RMA COLOR CODE FOR TUBULAR CERAMIC-DIELECTRIC CAPACITORS

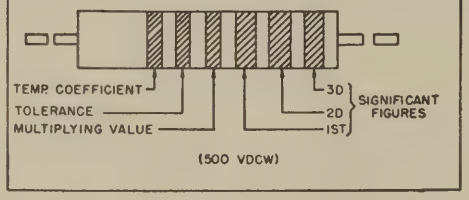

E

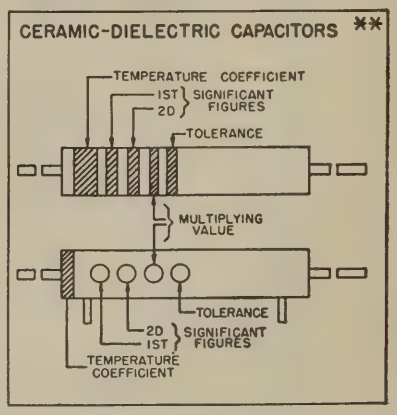

H

COLOR	SIGNIFICANT FIGURE	MULTIPLYING VALUE			RMA VOLTAGE RATING
		RMA MICA-AND CERAMIC-DIELECTRIC	JAN MICA-AND PAPER-DIELECTRIC	JAN CERAMIC-DIELECTRIC	
BLACK	0	1	1	1	-
BROWN	1	10	10	10	100
RED	2	100	100	100	200
ORANGE	3	1,000	1,000	1,000	300
YELLOW	4	10,000	10,000		400
GREEN	5	100,000			500
BLUE	6	1,000,000			600
VIOLET	7	10,000,000			700
GRAY	8	100,000,000		0.01	800
WHITE	9	1,000,000,000		0.1	900
GOLD	-	0.1	0.1		1,000
SILVER	-	0.01	0.01		2,000
NO COLOR	-				500

NOTES

* THE SILVER DOT IDENTIFIES THIS MARKING FOR WORKING VOLTAGES SEE JAN TYPE DESIGNATION CODE.

≠ THE BLACK DOT IDENTIFIES THIS MARKING. FOR WORKING VOLTAGES SEE JAN TYPE DESIGNATION CODE.

** CAPACITORS MARKED WITH THIS CODE HAVE A VOLTAGE RATING OF 500 VDCW. EITHER THE BAND OR DOT CODE MAY BE USED FOR BOTH INSULATED (AXIAL-LEAD) OR UNINSULATED (RADIAL-LEAD) CAPACITORS.

RMA: RADIO MANUFACTURERS ASSOCIATION

JAN: JOINT ARMY-NAVY

THESE COLOR CODES GIVE CAPACITANCES IN MICROMICROFARADS.

VACUUM-TUBE CROSS-REFERENCE GUIDE

VT-1	203A	VT-65-A	6C5G	VT-107	6V6
VT-4-B	211	VT-66	6F6	VT-107-A	6V6GT
VT-4-C	211 spc	VT-66-A	6F6G	VT-107-B	6V6G
VT-5	WE-215	VT-67	30 spc	VT-108	540-TH
VT-6	212A	VT-68	6B7	VT-109	2051
VT-7	WX-12	VT-69	6D6	VT-111	5BP4
VT-17	860	VT-70	6F7	VT-112	6AC7/1852
VT-19	861	VT-72	842	VT-114	5T4
VT-22	204A	VT-73	843	VT-115	6L6
VT-24	864	VT-74	5Z4	VT-115-A	6LG7
VT-25	10	VT-75	75	VT-116	6SJ7
VT-25-A	10 spc	VT-76	76	VT-116-A	6SJ7GT
VT-26	22	VT-77	77	VT-116-B	6SJ7 spc
VT-27	30	VT-78	78	VT-117	6SK7
VT-28	24A	VT-80	80	VT-117-A	6SK7GT
VT-29	27	VT-83	83	VT-118	832
VT-30	01A	VT-84	84/6Z4	VT-119	2X2/879
VT-31	31	VT-86	6K7	VT-120	954
VT-33	33	VT-86-A	6K7G	VT-121	955
VT-34	207	VT-86-B	6K7GT	VT-124	1A5GT
VT-35	35/51	VT-87	6L7	VT-125	1C5GT
VT-36	36	VT-87-A	6L7G	VT-126	6X5
VT-37	37	VT-88	6R7	VT-126-A	6X5G
VT-38	38	VT-88-A	6R7G	VT-126-B	6X5GT
VT-39	UV-869	VT-88-B	6R7GT	VT-127	100-TS
VT-39-A	869A	VT-89	89	VT-128	1630
VT-40	40	VT-90	6H6	VT-129	304-TL
VT-41	851	VT-90-A	6H6GT	VT-130	250-TL
VT-42	872	VT-91	6J7	VT-131	12SK7
VT-42-A	872A	VT-91-A	6J7GT	VT-132	12K8
VT-43	845	VT-92	6Q7	VT-133	12SR7
VT-44	32	VT-92-A	6Q7G	VT-134	12A6
VT-45	45	VT-93	6B8	VT-135	12J5GT
VT-46	866	VT-93-A	6B8G	VT-135-A	12J5
VT-46-A	866A/866	VT-94	6J5	VT-136	1625
VT-47	47	VT-94-A	6J5G	VT-137	1626
VT-48	41	VT-94-B	6J5 spc	VT-138	1629
VT-49	39/44	VT-94-C	6J5G spc	VT-139	VR-150-30
VT-50	50, 585, 586	VT-94-D	6J5GT	VT-142	WE-39-DY1
VT-51	841	VT-95	2A3	VT-143	805
VT-52	45 spc	VT-96	6N7	VT-144	813
VT-53	VT-42-A	VT-97	5W4	VT-145	5Z3
VT-54	34	VT-98	6U5/6G5	VT-146	1N5GT
VT-55	865	VT-98-A	6G5G	VT-147	1A7GT
VT-56	56	VT-99	6F8G	VT-148	1D8GT
VT-57	57	VT-100	807	VT-149	3A8GT
VT-58	58	VT-100A	807 mod	VT-150	6SA7
VT-60	850	VT-101	837	VT-150-A	6SA7GT
VT-62	801A, 801	VT-103	6SQ7	VT-151	6A8G
VT-63	46	VT-104	12SQ7	VT-151-B	6A8GT
VT-64	800	VT-105	6SC7	VT-152	6K6GT
VT-65	6C5	VT-106	803	VT-152-A	6K6G

VT-153	12C8 spc	VT-210	1S4
VT-154	814	VT-211	6SG7
VT-161	12SA7	VT-212	958
VT-162	12SJ7	VT-213-A	6L5G
VT-163	6C8G	VT-214	12H6
VT-164	1619	VT-215	6E5
VT-165	1624	VT-216	816
VT-166	WE-371-A	VT-217	811
VT-167	6K8	VT-219	8007
VT-167-A	6K8G	VT-220	250-TH
VT-168-A	6Y6G	VT-221	3Q5GT
VT-170	1E5GP	VT-222	884
VT-171	1R5	VT-223	1H5GT
VT-171-A	1R5	VT-224	RK-34
VT-172	1S5	VT-225	307A
VT-173	1T4	VT-226	3EP1/1806-P1
VT-174	3S4	VR-227	KR-7184
VT-175	1613	VT-228	8012
VT-176	6AB7/1853	VT-229	6SL7GT
VT-177	1LH4	VT-230	WE-350A
VT-178	1LC6	VT-231	6SN7GT
VT-179	1LN5	VT-232	E-1148
VT-180	3LF4	VT-233	6SR7
VT-181	7Z4	VT-234	HY-114B
VT-182	3B7/1291	VT-235	HY-615
VT-183	1R4/1294	VT-236	836
VT-184	VR-90-30	VT-237	957
VT-185	3D1/1299	VT-238	956
VT-187	575-A	VT-239	1LE3
VT-188	7E6	VT-240	WE-710A
VT-189	7F7	VT-241	7E5/1201
VT-190	7H7	VT-243	7C4/1203A
VT-191	316-A	VT-244	5U4G
VT-192	7A4	VT-245	2050
VT-193	7C7	VT-246	918
VT-194	7J7	VT-247	6AG7
VT-195	CK-1005	VT-248	1808
VT-196	6W5G	VT-249	CK-1006
VT-197-A	5Y3GT/G	VT-252	923
VT-198-A	6G6G	VT-254	304-TH
VT-199	6SS7	VT-255	705A
VT-200	VR-105-30	VT-259	829
VT-201	25L6	VT-260	VR-75-30
VT-201-C	25L6GT	VT-264	3Q4
VT-202	9002	VT-266	1616
VT-203	9003	VT-267	578
VT-204	HK-24-G	VT-268	12SC7
VT-205	6ST7	VT-269	WE-717A
VT-206-A	5V4G	VT-286	832A
VT-207	12AH7GT	VT-287	815
VT-208	7B8	VT-288	12SH7
VT-209	12SG7	VT-289	12SL7GT

5517	CK-1013	6064	6AM6
5557	TT-17	6065	6BH6
5591	6AK5	6066	6AT6
5632	C3J	6067	12AU7
5642	SN956	6072	6AY7
5651	0A3/VR-75	6073	0A2/VR-150
5654	6AK5	6074	0B2
5664	3631	6080	6AS7
5670	2C51	6084	6SJ7
5679	7A5	6085	6SN7GT
5684	C3JA	6087	5Y3GT
5685	6C J	6094	6AQ5
5691	6SL7GT	6095	6AQ5
5692	6SN7GT	6096	6AK5
5693	6SJ7	6097	6AL5
5720	FG33	6098	6AR6
5725	6AS6	6099	6J6
5726	6AL5	6100	6C4
5727	2D21	6101	6J6
5749	6BA6	6106	5Y3GT
5750	6BE6	6117	1B58
5751	12AX7G	6130	3C45
5755	6SU7GTY	6132	6CH6
5814	12AU7	6134	6AC7
5839	25Z6	6135	6C5
5844	6J6	6136	6AU6
5852	6X5	6137	6SK7
5871	6V6GT	6185	2C51
5881	6L6/1614	6186	6AQ5
5910	1U4	6187	6AS6
5930	2A3	6188	6SU7GT
5931	5U4	6189	12AU7
5932	6L6G	6201	12AT7
5933	807	6202	6X4
5948	1754	6265	6BH6
5949	1907	6277	3B28A
5957	E37	6278	C5F14
5959	E41	6288	816
5977	6K6	6322	BL25
5992	6V6	6333	892
5993	6X4	6336	6AS7
6002	OK221	6385	2C51
6005	6AQ5	6386	2C51
6021	6BF7	6402	QK303
6038	1B35A	6405	1640
6057	12AX7	6444	ESM-48
6058	6AL5	6485	6AH6
6059	6J7	6527	2J42
6060	12AT7	7000	6J7
6061	6V6GT	7700	6C6
6062	5763	8016	1B3
6063	6X4	4PR60	5D21/715C

$3.50
Cat. No. EE-510